BLS 9200 Bilge Level Switch

KEY FEATURES

- Designed and constructed for severe service applications, where absolute reliability is required for safety critical installations
- Rugged all 316 Stainless Steel design ensures reliable operation
- Compact design
- Simple installation via integral mounting bracket
- Fully submersible IP68 construction with cable resistant to marine applications
- Stainless steel slosh and debris protection shield
- Marine type approved by LR, BV & DNV

Email: instrumentation@hmagrp.com **Tel:** +61 (0)2 9428 7300 **Fax:** +61 (0)2 9428 7399

BLS 9200 Bilge Level Switch

BLS 9200 LEVEL SWITCH FOR LIQUID DETECTION IN BILGES, VOIDS AND SUMPS

Bilge level switches are a safety critical component for the detection of liquid in dead spaces, voids and sumps that are rarely visited or inspected by the crew. They need to be able to withstand years of installation in difficult environmental conditions, yet operate immediately and reliably should a rising liquid level indicate a leakage or flooding hazard.

When considering these products it would be easy for a ship builder or owner to try and make economies by using cheaper devices, often constructed with poor quality materials and designs. We believe that this approach compromises safety, and is a false economy as maintenance and replacement costs will always exceed those of installing the right device first time.

The 9200 Bilge Level Switch is designed, manufactured and approved to meet and exceed the requirements for severe service applications on all classes of marine vessels and offshore installations, and should always be the first choice for safety critical applications.

NEVER COMPROMISE ON SAFETY

The BLS 9200 Bilge Level Switch is designed, manufactured and approved to meet and exceed the requirements for severe service applications on all classes of marine vessels and offshore installations.

Key benefits that the BLS 9200 offer are:

- Rugged all-stainless steel design with EPR cable resistant to seawater, fuel oil and hydraulic fluid ensures reliable operation over years of service.
- Compact in size with a mechanical mounting using a two-bolt mounting bracket means that installation and commissioning is simple and fast.
- Self-draining cage design prevents fouling of the float from obstructions or floating debris in the bilge, as well as protection from false-switching.
- Integral switch test lever allows full testing of the float movement and switch functionality ensures routine safety tests can be carried out for peace-of-mind.
- Normally-open or normally-closed operation and user-selectable cable lengths ensures the BLS 9200 can be quickly delivered against each customers exact requirement.

Many major ship builders and offshore rig construction companies also agree with our "safety first" message and now specify the BLS 9200 as standard fitment for all their new build and refurbishment projects.

BLS 9200 Bilge Level Switch

Specifications	
Material of construction	Stainless steel stem, float, test mechanism, body plates & slosh shield
Cable	Marine grade EPR Insulated with LSZH elastomeric type SW4 sheath, 3 -core with polyolefin boot
Cable length	2m as standard. Other lengths optional
Process Temperature	-10 to +90C
Switch type	S.P.C.O. reed switch
Switch MTBF	3 per million hours operation
Electrical rating - maximum	100 VA resistive load (maximum 500 V DC or 250 V AC at 3A)
Electrical rating - minimum	3W (to prevent long-term switch contact material activation)
Float SG	0.62 (others optional)
Marine type approvals	LR, BV and DNV

Email: instrumentation@hmagrp.com **Tel:** +61 (0)2 9428 7300 **Fax:** +61 (0)2 9428 7399

BLS 9200 Bilge Level Switch

GA drawing

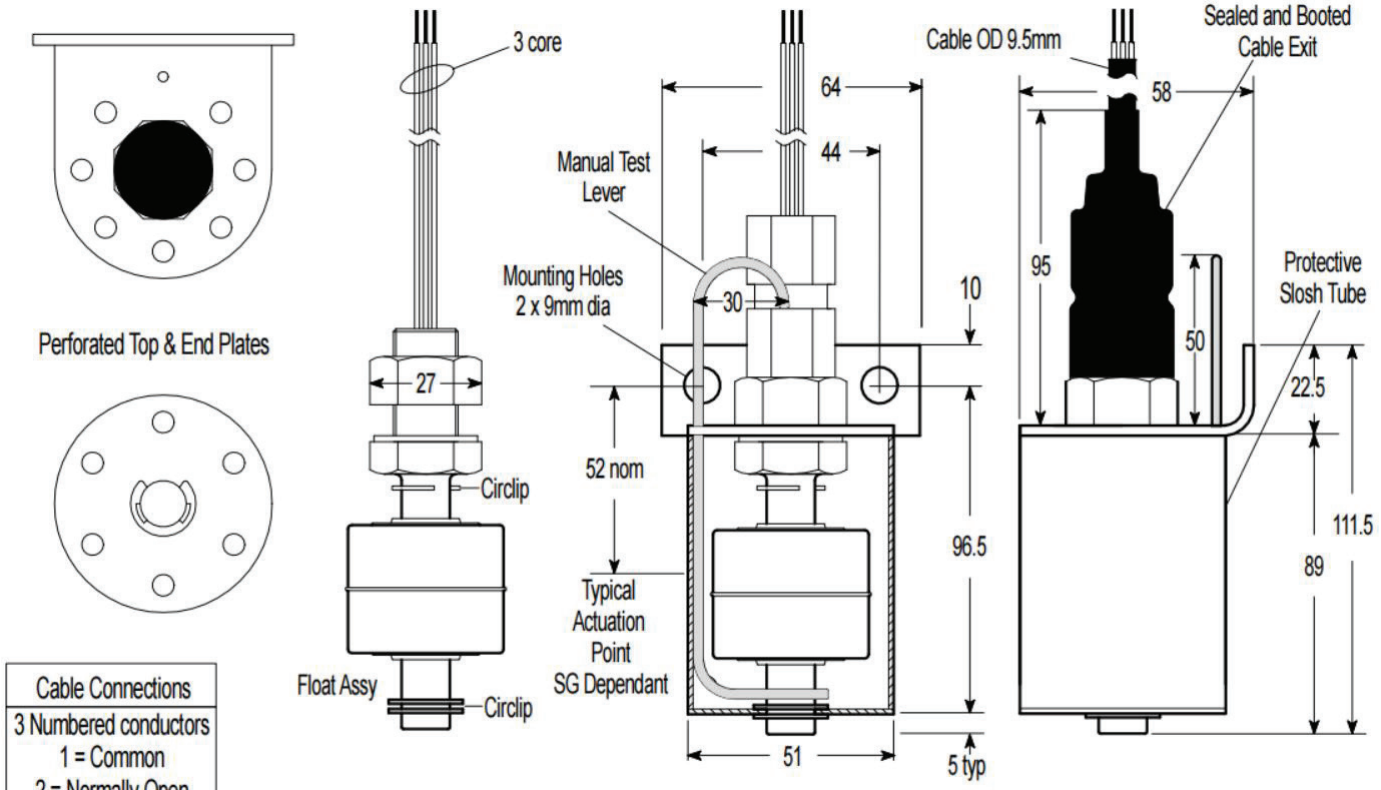

Cable Connections
3 Numbered conductors
1 = Common
2 = Normally Open
3 = Normally Closed

Material All 316 Stainless Steel

GA drawing (optional termination enclosure)

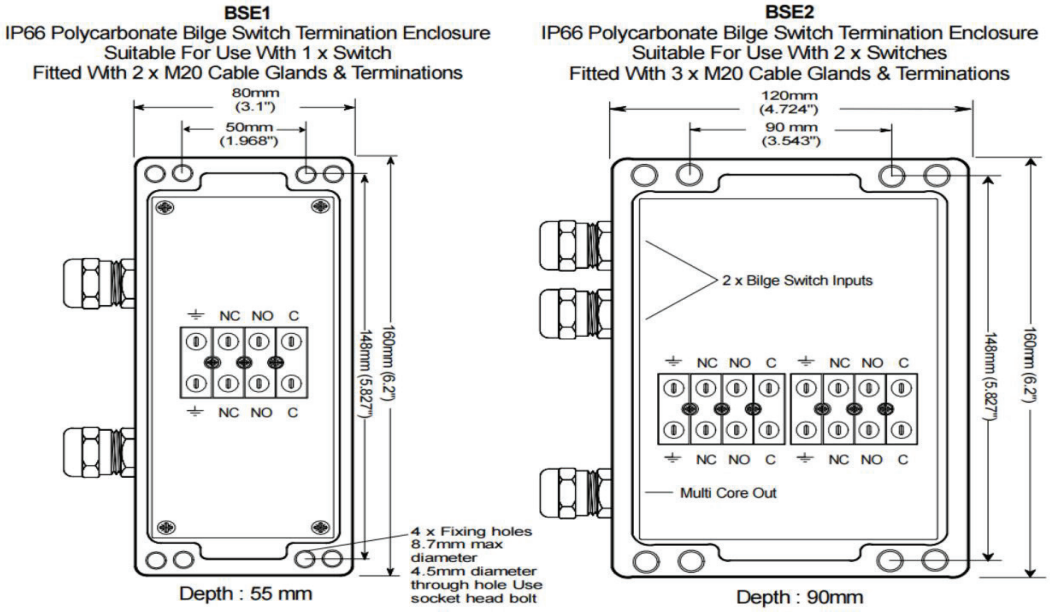

www.hmagrp.com **Email:** instrumentation@hmagrp.com **Tel:** +61 (0)2 9428 7300 **Fax:** +61 (0)2 9428 7399