HMA

FLOW & INDUSTRIAL

General Purpose Knifegate Valves

General Purpose Knifegate Valves

HMA FLOW & INDUSTRIAL

HEAVY DUTY FULLY LUGGED STYLE KNIFEGATE VALVE

FEATURES:

- Compact design for easy installation and maintenance
- Both 304SS and 316SS valves available
- Available in metal & resilient seat
- Uni-directional design
- One piece integral cast body, chest and lugs
- Integral cast in gate wedges minimize flow obstructions
- High flow rates with low pressure drops
- Gate guides to support gate
- Design and tested acording to MSS SP-81
- Complies with AS6401 & MSS SP-81 face to face dimensions
- Every valve pressure tested
- Gate machined over full length for optimum sealing
- 50 to 1200mm sizes available, 50 to 600mm kept in stock
- 10 bar pressure rating
- Specifically formulated PTFE impregnated packing material for increased service life and lower friction
- Specialised packing for chemical resistant or abrasive applications available on request
- Available with a variety of actuators including handwheel, chain wheel, quick acting lever, geared, electric, air or hydraulic cylinder actuator

OPTIONS:

- Bonneted, Bi-directional, non-rising stem adapter, deflection cones, positioners, limit switches, solenoids, pneumatic failsafe & shrouds.
- Plastic coated lever handle with locking device

APPLICATIONS:

The Heavy Duty Knifegate Valve is designed for a wide range of applications such as:

- Waste Water & Water
- Mining
- Fly Ash Handling Plants
- Bulk Conveying
- Corrosive Environments
- Pulp & Paper
- Food & Beverage
- Chemical Plants

General Purpose Knifegate Valves

MANUAL ACTUATION STANDARD MATERIALS

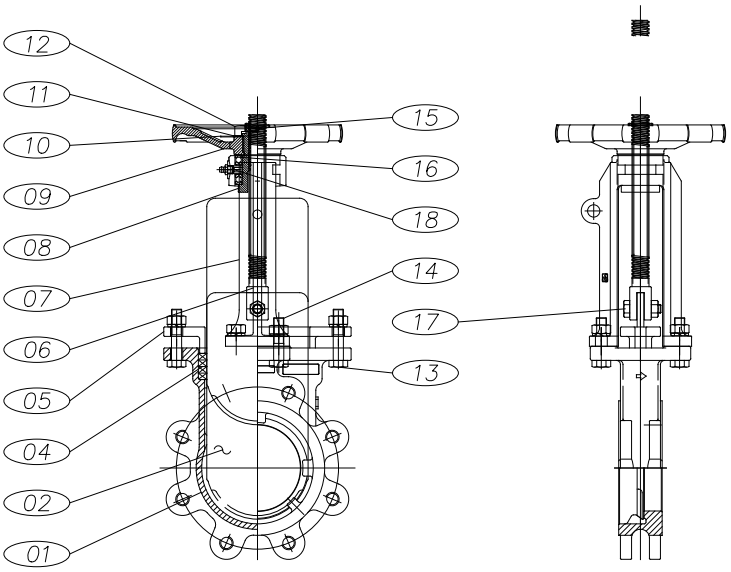

DN50 – DN300

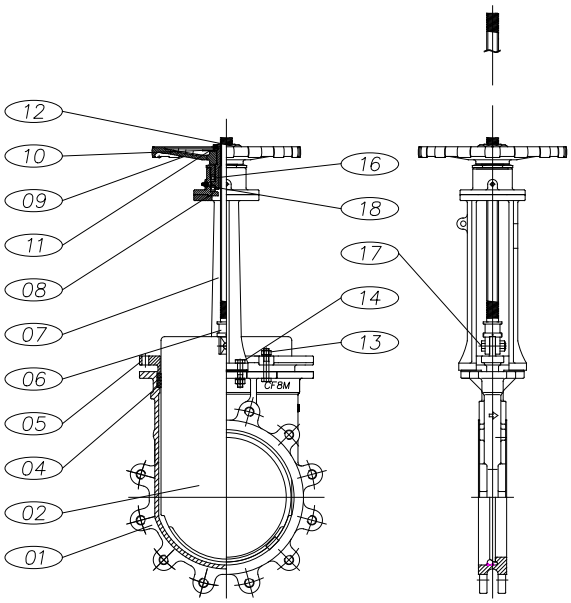

DN350 – DN600

DIMENSIONS:

No.	Part Name	Material Code (ASTM)
1	Body	SS304, 316 or 316L (A351-CF8)
2	Gate	SS304, 316 or 316L (A351-CF8)
3	Packing Gland	SS304, 316 or 316L (A351-CF8)
4	Super Structure	SS304, 316 or 316L (A351-CF8)
5	Sleeve	Bronze Casting (C83600)
6	Packing	PTFE Impregnated Braided Fibre

No.	Part Name	Material Code (ASTM)
7	Thrust Bearing	50 - 300mm: Thrust Plate (Bronze)
8	Hand Wheel	Cast Iron
9	Seat Ring	SS304, 316 or 316L (A351-CF8)
10	Fasteners	SS304, 316 or 316L (A351-CF8)
11	Clevis	SS304, 316 or 316L (A351-CF8)
12	Resilient Seat	Viton

Size (mm)	50	65	80	100	125	150	200	225	250	300	350	375	400	450	500	600
L (mm)	48	51	51	51	57	57	70	70	70	76	76	89	89	89	114	114
H (mm)	350	410	440	520	595	660	880	1025	1025	1190	1355	1530	1530	1690	1880	2200
PCD (mm)	114	127	146	178	210	235	292	324	356	406	470	495	521	548	641	756
W (mm)	200	200	200	225	250	250	280	350	350	400	400	450	450	450	600	600
N-H	4-M16	4-M16	4-M16	4-M16	8-M16	8-M16	8-M16	8-M16	8-M20	12-M20	12-M24	12-M24	12-M24	12-M24	16-M24	16-M27
Weight (kg)	9.5	12	13	16	19	22	34	53	53	65	90	145	145	180	227	282

Note

- The designs, materials, dimensions and specifictations shown are subject to change without notice due to our continuing program of product development. Please request a certified drawing if dimensions are critical.

General Purpose Knifegate Valves

PNEUMATIC ACTUATION

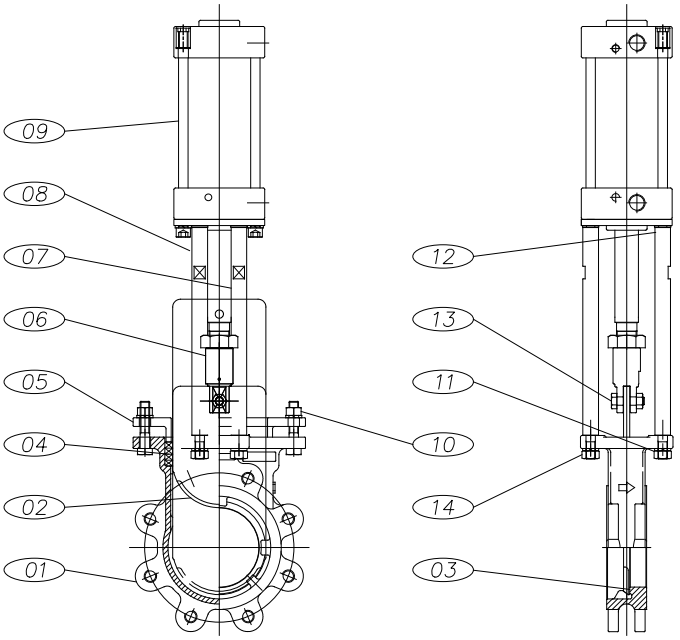

DN50 – DN350

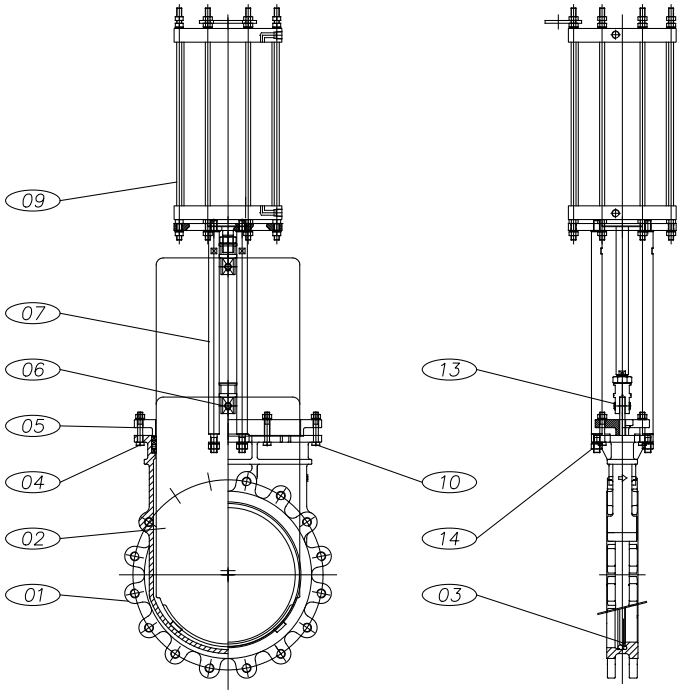

DN400 – DN600

STANDARD MATERIALS

No.	Part Name	Material Code (ASTM)
1	Body	SS304, 316 or 316L (A351-CF8)
2	Gate	SS304, 316 or 316L (A351-CF8)
3	Packing	PTFE Impregnated Braided Fibre
4	Packing Gland	SS304, 316 or 316L (A351-CF8)

No.	Part Name	Material Code (ASTM)
5	Super Structure	SS304, 316 or 316L (A351-CF8)
6	Clevis	SS304
7	Piston Rod	SS304
8	Cylinder	Aluminium or Fibreglass

DIMENSIONS:

Size (mm)	50	65	80	100	125	150	200	225	250	300	350	375	400	450	500	600
L (mm)	48	51	51	51	57	57	70		70	76	76		89	89	114	114
H (mm)	500	561	574	675	750	815	966		1181	1340	1448		1648	1834	2020	2120
PCD (mm)	114	127	146	178	210	235	292		356	406	470		521	548	641	756
N-H	4-M16	4-M16	4-M16	4-M16	8-M16	8-M16	8-M16		8-M20	12-M20	12-M24		12-M24	12-M24	16-M24	16-M27
Weight (kg)	11	13	15	21	25	31	58		103	137	158		172	202	256	494

Note

- The designs, materials, dimensions and specifictations shown are subject to change without notice due to our continuing program of product development. Please request a certified drawing if dimensions are critical.

Email: flowandindustrial@hmagrp.com
Tel: +61 (0)2 4389 6191
Fax: +61 (0)2 4389 6199