V-Belt Pulley - SPA

SPA V-BELT PULLEYS

V-belt pulleys are devices which transmit power between axles by the use of a V-belt, a mechanical linkage with a trapezoidal cross-section. Together these devices offer a high-speed power transmission solution that is resistant to slipping and misalignment.

The most notable difference between a V-belt pulley and other types of pulleys (round belt, flat, etc.) would be the geometry of the groove or grooves located around the circumference of the pulley; these grooves guide and gain traction on a V-belt.

We have available an extensive range of pulleys to suit all cross sections of V-Belts. with a pilot bore, bored & keyed or with a taper lock bush arrangement.

V-Belt Pulley - SPA

HMA FLOW & INDUSTRIAL

Pulley (dw)	Grooves	Bush	d2 Max	Type	L	b	d3	d1	d	App. Kg
75	1	1108	28	2	22	20	60		80.6	0.5
	2	1108	28	4	22	35		41	80.6	0.7
80	1	1210	32	2	25	20	76		85.6	.5
	2	1210	32	4	25	35		46	85.6	.75
	3	1210	32	4	25	50		46	85.6	.95
85	1	1210	32	2	25	20	76		90.6	.6
	2	1210	32	4	25	35		51	90.6	.8
	3	1210	32	4	25	50		51	90.6	1.00
90	1	1210	32	2	25	20	76		95.6	.7
	2	1610	42	4	25	35		56	95.6	.8
	3	1610	42	4	25	50		56	95.6	1.05
	4	1615	42	4	38	65		56	95.6	1.35
95	1	1210	32	2	25	20	76		100.6	.8
	2	1610	42	4	25	35		61	100.6	1
	3	1610	42	4	25	50		61	100.6	1.2
	4	1615	42	4	38	65		61	100.6	1.5
100	1	1610	42	2	25	20	86		105.6	.85
	2	1610	42	4	25	35		66	105.6	1
	3	1610	42	5	25	50		66	105.6	1.40
	4	1615	42	5	38	65		66	105.6	1.8
	5	1615	42	4	38	80		66	105.6	2.2
	6	1615	42	6	38	95		66	105.6	2.35
106	1	1610	42	2	25	20	86		111.6	1
	2	1610	42	4	25	35		72	111.6	1.3
	3	1610	42	5	25	50		72	111.6	1.5
	4	2012	50	4	32	65		72	111.6	1.7
	5	2012	50	4	32	80		72	111.6	2.10
	6	2012	50	4	32	95		72	111.6	2.4
112	1	1610	42	2	25	20	86		117.6	1.05
	2	1610	42	4	25	35		78	117.6	1.35
	3	2012	50	4	32	50		78	117.6	1.8
	4	2012	50	4	32	65		78	117.6	2
	5	2012	50	4	32	80		78	117.6	2.5
	6	2012	50	4	32	95		78	117.6	2.7
118	1	1610	42	2	42	2	86		123.6	1.2
	2	1610	42	4	42	4		84	123.6	1.6
	3	2012	50	4	50	5		84	123.6	1.85
	4	2012	50	4	50	5		84	123.6	2.2
	5	2012	50	4	50	5		84	123.6	2.7
	6	2012	50	4	50	4		84	123.6	3
125	1	1610	42	2	25	20	86		130.6	1.35
	2	1610	42	5	25	35		91	130.6	1.85
	3	2012	50	5	32	50		91	130.6	2.25
	4	2012	50	5	32	65		91	130.6	2.7
	5	2012	50	5	32	80		91	130.6	3.1
	6	2012	50	6	32	95		91	130.6	3.5
132	1	1610	42	2	25	20	86		137.6	1.6
	2	2012	50	5	32	35		98	137.6	2.1
	3	2012	50	5	32	50		98	137.6	2.55
	4	2517	60	5	45	65		98	137.6	2.8
	5	2517	60	5	45	80		98	137.6	3.3
	6	2517	60	6	45	95		98	137.6	3.8
140	1	1610	42	2	25	20	86		145.6	1.8
	2	2012	50	5	32	35		106	145.6	2.5
	3	2517	60	5	45	50		106	145.6	2.8
	4	2517	60	5	45	65		106	145.6	3.8
	5	2517	60	5	45	80		106	145.6	4
	6	2517	60	6	45	95		106	145.6	4.65

V-Belt Pulley - SPA

HMA FLOW & INDUSTRIAL

Pulley (dw)	Grooves	Bush	d2 Max	Type	L	b	d3	d1	d	App. Kg
150	1	1610	42	2	25	20	86		155.6	2.2
	2	2012	50	5	32	35		116	155.6	3
	3	2517	60	5	45	50		116	155.6	3.55
	4	2517	60	5	45	65		116	155.6	4.1
	5	2517	60	5	45	80		116	155.6	4.9
	6	2517	60	6	45	95		116	155.6	5.2
160	1	1610	42	7	25	20	86		165.6	1.85
	2	2012	50	5	32	35		126	165.6	3.5
	3	2517	60	5	45	50		126	165.6	4.4
	4	2517	60	5	45	65		126	165.6	5.1
	5	2517	60	5	45	80		126	165.6	5.5
	6	2517	60	6	45	95		126	165.6	6.2
180	1	1610	42	7	25	20	86	146	185.6	2
	2	2012	50	8	32	35	105	146	185.6	3.8
	3	2517	60	5	45	50		146	185.6	6
	4	2517	60	5	45	65		146	185.6	6.65
	5	3020	75	5	51	80		146	185.6	6.8
	6	3020	75	6	51	95		146	185.6	9.3
200	1	2012	50	7	32	20	105	166	205.6	3
	2	2517	60	7	45	35	120	166	205.6	4.4
	3	2517	60	8	45	50	120	166	205.6	5.2
	4	3020	75	5	51	65		166	205.6	8.3
	5	3020	75	6	51	80		166	205.6	8.9
	6	3020	75	6	51	95		166	205.6	9.8
	8									
212	1	2012	50	7	32	20	105	178	217.6	3.2
224	1	2012	50	9	32	20	105	190	229.6	3.25
	2	2517	60	7	45	35	120	190	229.6	5.25
	3	2517	60	8	45	50	120	190	229.6	6.2
	4	3020	75	5	51	65		190	229.6	11.2
	5	3020	75	5	51	80		190	229.6	12.1
	6	3020	75	6	51	95		190	229.6	13.4
250	1	2012	50	9	32	20	105	216	255.6	3.8
	2	2517	60	9	45	35	120	216	255.6	5.8
	3	2517	60	8	45	50	120	216	255.6	6.55
	4	3020	75	8	51	65	155	216	255.6	9.7
	5	3020	75	8	51	80	155	216	255.6	10.5
	6	3020	75	8	51	95	155	216	255.6	11.7
280	1	2012	50	9	32	20	105	246	285.6	4.7
	2	2517	60	9	45	35	120	246	285.6	6.4
	3	2517	60	8	45	50	120	246	285.6	8.9
	4	3020	75	8	51	65	155	246	285.6	10.40
	5	3535	90	7	89	80	175	246	285.6	15.1
	6	3535	90	8	89	95	175	246	285.6	16.7
315	1	2012	50	9	32	20	105	281	320.6	4.9
	2	2517	60	9	45	35	120	281	320.6	7.5
	3	3020	75	7	51	50	155	281	320.6	11.8
	4	3020	75	8	51	65	155	281	320.6	15.5
	5	3535	90	7	89	80	175	281	320.6	17.3
	6	3535	90	10	89	95	175	281	320.6	18.9
355	1	2012	50	9	32	20	105	321	360.6	5.5
	2	2517	60	9	45	35	120	321	360.6	8.8
	3	3020	75	9	51	50	155	321	360.6	12.2
	4	3020	75	10	51	65	155	321	360.6	13.5
	5	3535	90	9	89	80	175	321	360.6	20.2
	6	3535	90	10	89	95	175	321	360.6	21

V-Belt Pulley - SPA

PULLEY TYPES

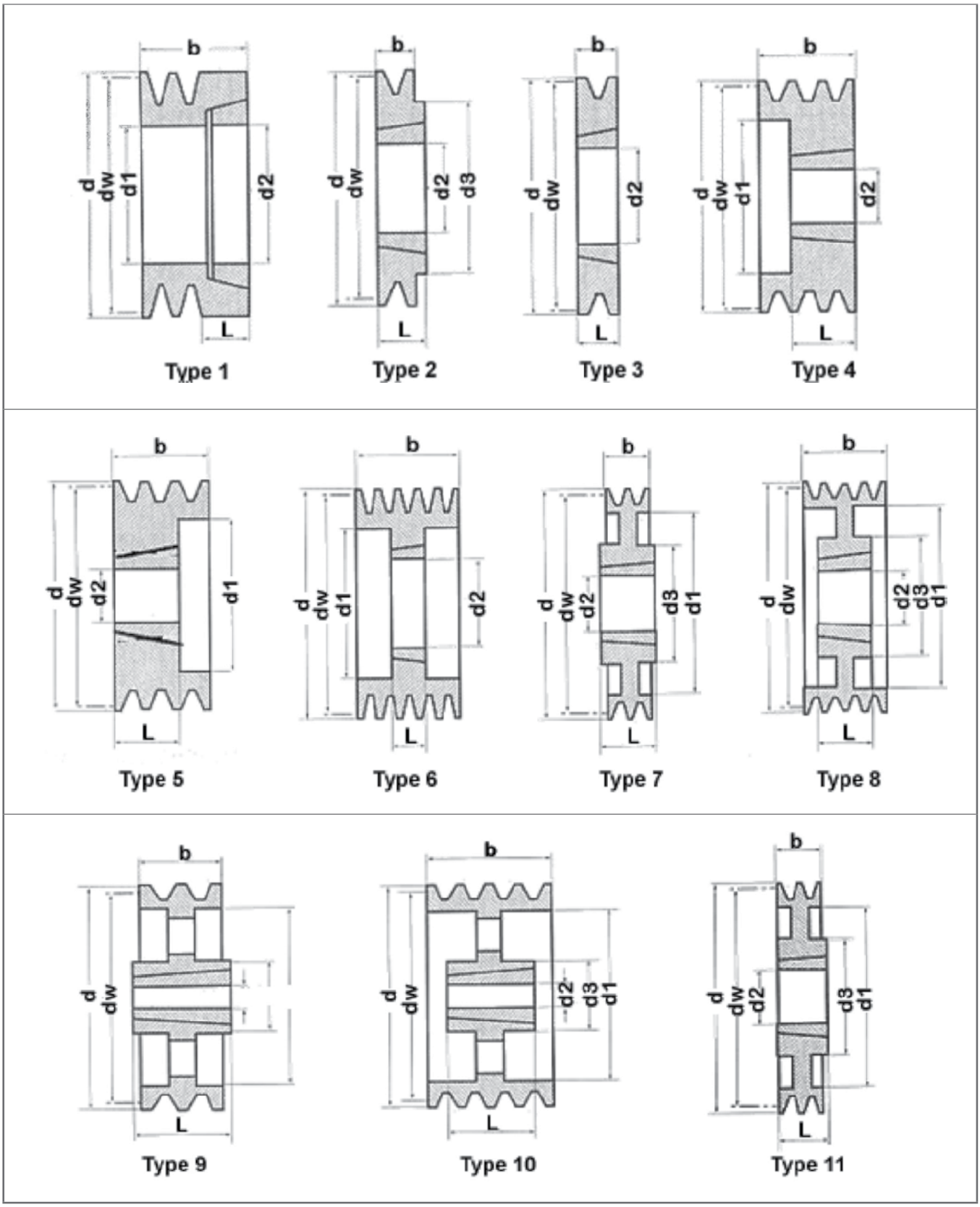

Email: flowandindustrial@hmagrp.com
Tel: +61 (0)3 8720 6770
Fax: +61 (0)3 8720 6779