HMA GEOTECHNICAL

Manual

INCLINOMETER CASING INSTALLATION MODEL 7040

CONTENTS

		PAGE
Introduction		-P03
Installation Flow Chart		-P04
STEP 1.	Install end cap	-P06
STEP 2.	Attach steel support cable	-P07
STEP 3.	Attach grout pipes	-P08
STEP 4.	Add water to casing	-P10
STEP 5.	Lower and clamp casing	-P11
STEP 6.	Check orientation of casing	-P12
STEP 7.	Add extra length of casing	-P13
STEP 8.	Tape grout pipes to casing	-P16
STEP 9.	Add additional grout pipes as required	-P16
STEP 10.	Is the casing correctly installed	-P17
STEP 11.	Disassemble casing	-P17
STEP 12.	Trim casing	-P18
STEP 13.	Run test probe	-P19
STEP 14.	Cap the casing	-P19
STEP 15.	Pea gravel backfilling	-P20
STEP 16.	Poured grout backfilling	-P22
STEP 17.	Tremie grout casing	-P25
STEP 18.	Protect and cap casing	-P26
STEP 19.	Take base readings	-P26
Installation Record		-P27

INTRODUCTION

This manual provides guidance on the installation of Geotechnical Systems Australia's (G.S.A.) Inclinometer Casing Model 7040. The distinctive yellow high impact ABS plastic (70mm O.D.) is high in strength, flexible, light weight and corrosion resistant. The unique jointing system makes it easy to assemble and is self aligning, watertight, strong and flush coupling. Disassembly and reassembly, if required, is quick and easy. The jointing system eliminates the need for solvent cements with individual couplings and reduces the required hole diameter to a minimum.

To install the GSA inclinometer casing simply follow the flow chart on page 2. Detailed explanations are provided by turning to the step number which appears just above the box in the flow chart.

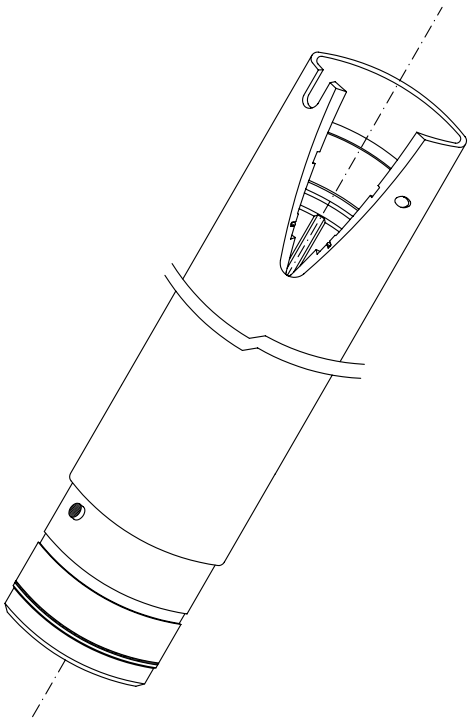

INCLINOMETER CASING INSTALLATION FLOW CHART

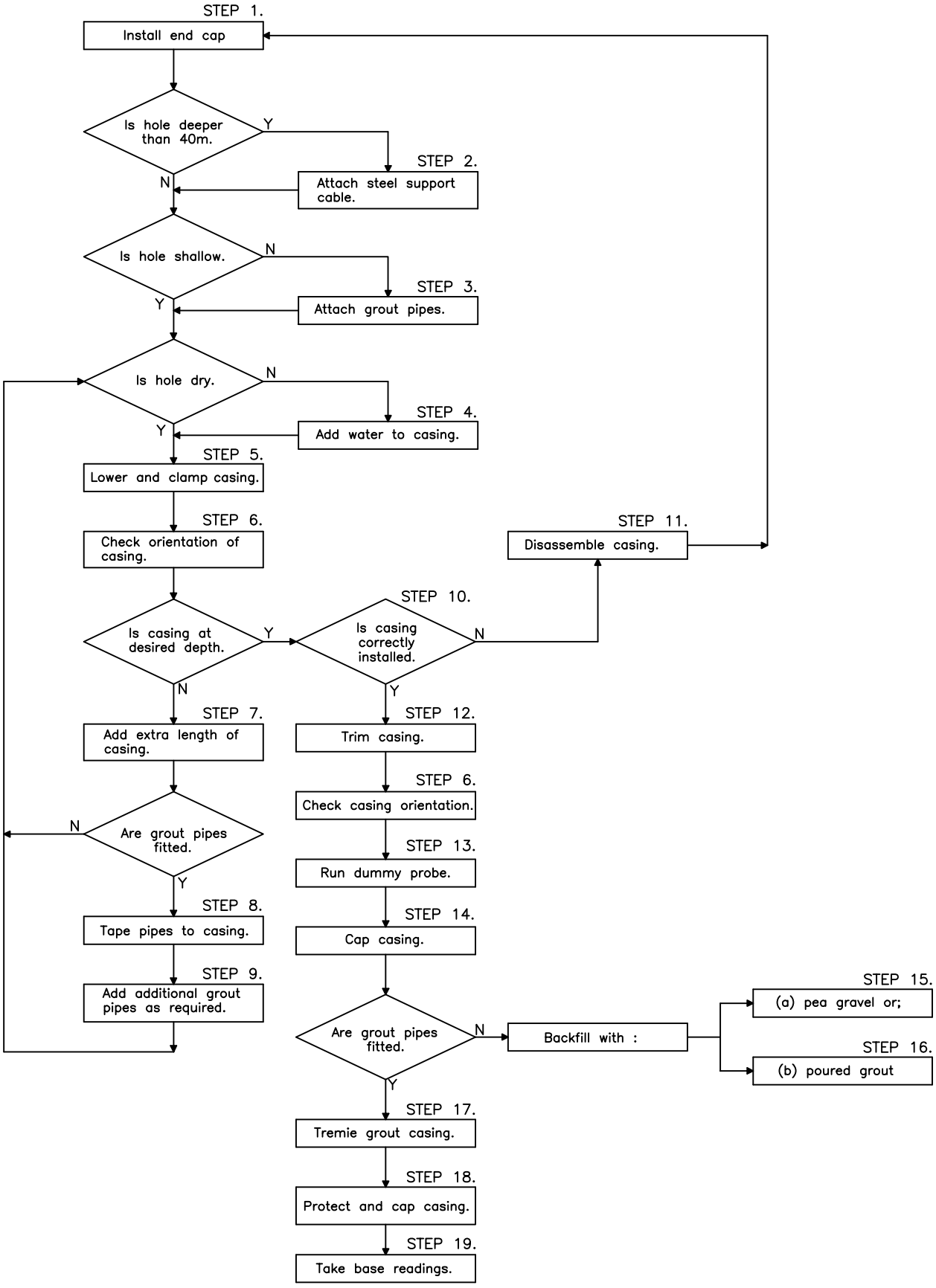

Email: geotechnical@hmagrp.com

INSTALLATION OF G.S.A. INCLINOMETER CASING MODEL 7040

STEP DETAILS

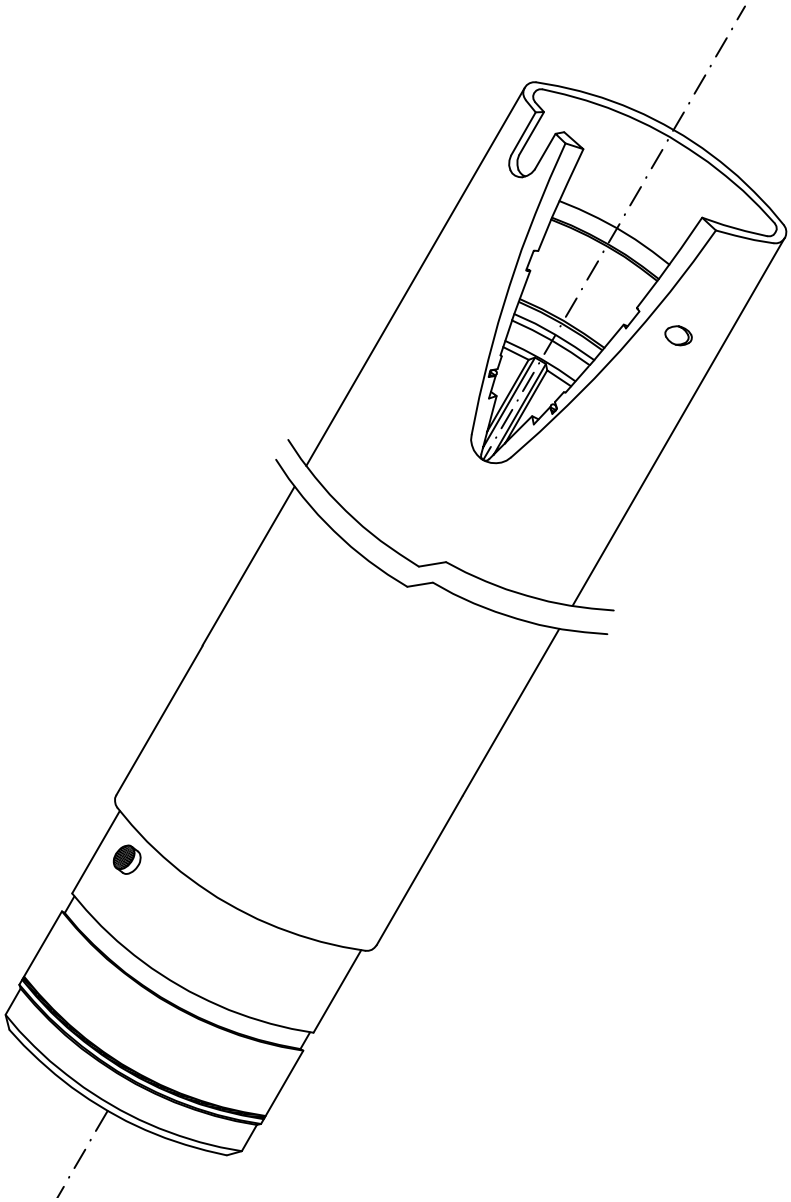

Email: geotechnical@hmagrp.com

STEP 1. : Install end cap.

(a) Snap the end cap (7040-2-2) onto the male end of the inclinometer casing using the key as a guide.

(b) Feed the plastic strip (7040-3) through the feed hole until the end is visible through the feed hole. Ensure that the serrated side faces outward.

(c) Trim the excess plastic strip.

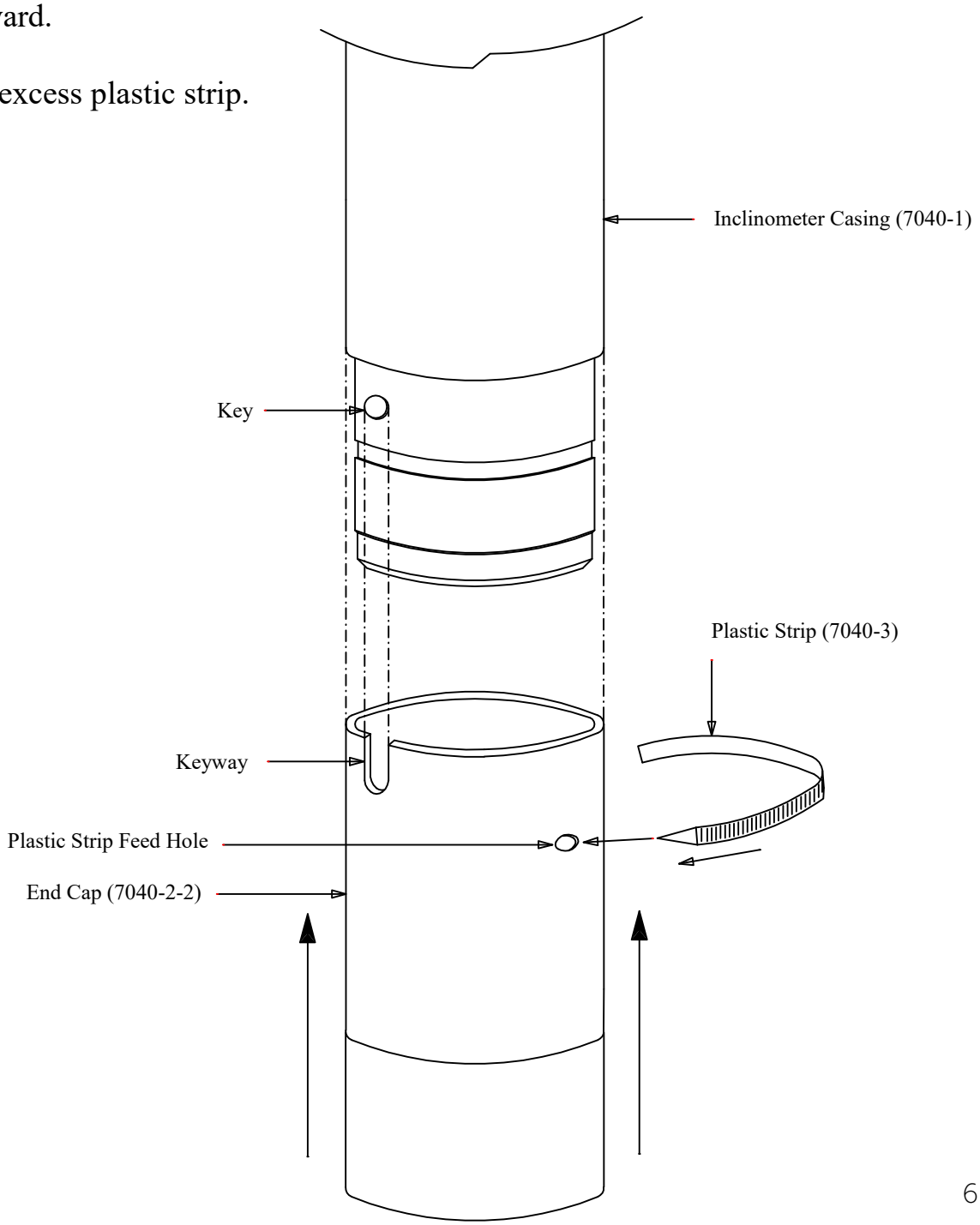

Email: geotechnical@hmagrp.com

STEP 2. : Attach steel support cable.

For boreholes deeper than 40 metres attach a 3mm diameter steel wire cable just above the end cap to support the casing weight. Use 3 cable clamps to attach the steel cable and then wrap with about 200mm of adhesive tape to prevent snagging. Allow sufficient cable length so that the casing can be anchored to a nearby piece of equipment such as a drilling rig. The cable is then fed out as required.

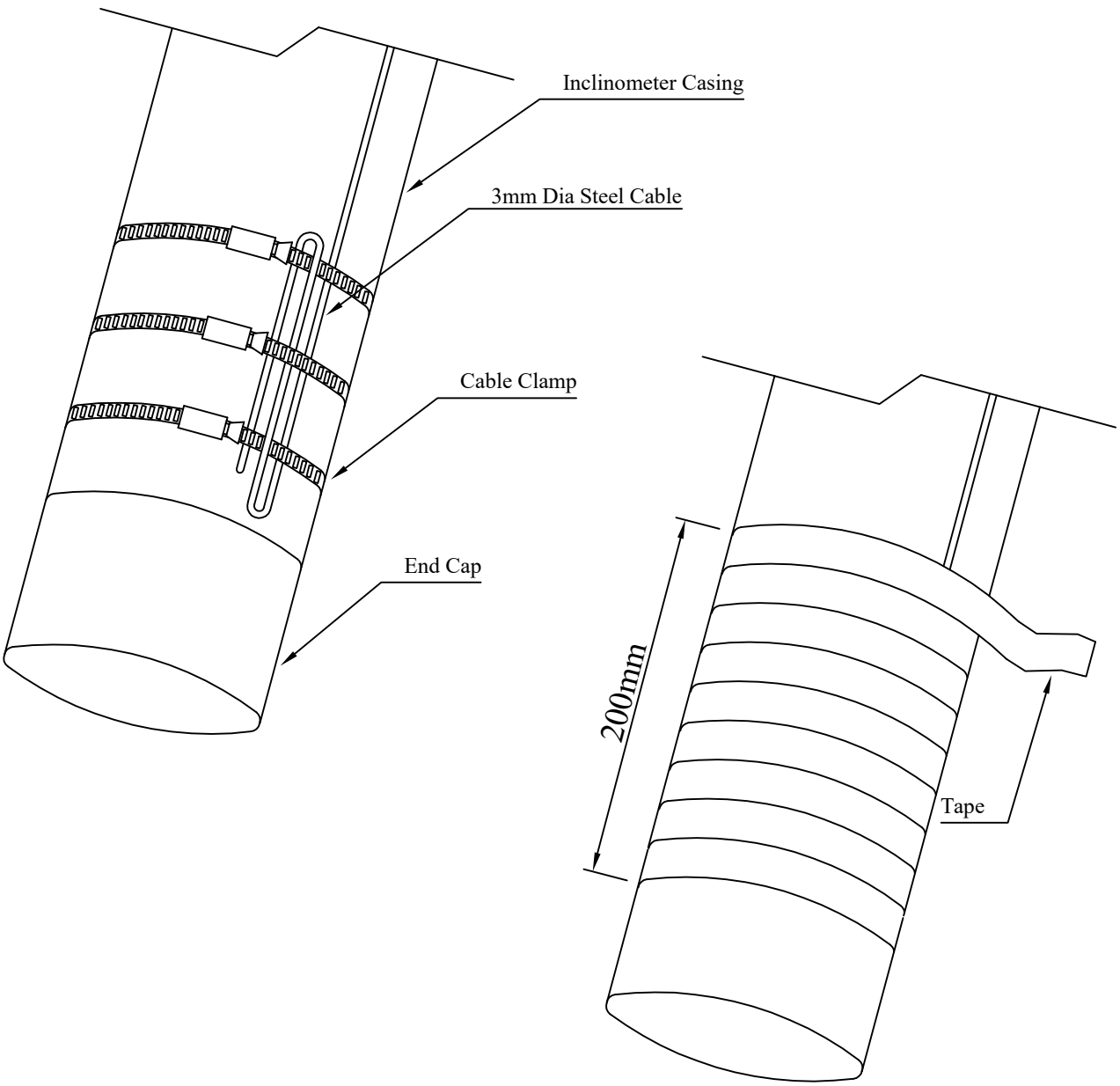

Email: geotechnical@hmagrp.com

STEP 3. : Attach grout pipes.

Tremie pipe grouting is the preferred method of grouting. This technique can be applied to both dry and water-filled boreholes. For deep boreholes grouting should be done in stages. This will require multiple grout pipes to be attached to the casing. As the spacing of the grout tubes is mainly dependent upon the ground conditions, no general recommendations on grout tube spacing can be made.

During grouting the casing should be filled with water. This achieves two things :
(i) reduces the likelihood of grout ingress into the casing.
(ii) reduces the net pressure of the grout.

A minimum of two grout tubes need to be attached near the bottom of the casing. One within 300mm of the bottom and the other 5 metres above the bottom.

(a) Use 20mm diameter LDPE tubing with the bottom end cut at 45 ^{o}and three holes cut in the side of the tubing over the last metre.

(b) Clearly mark the grout tubes at the upper end.

(c) Tape each grout tube in position, ensuring the side holes are not covered.

Email: geotechnical@hmagrp.com

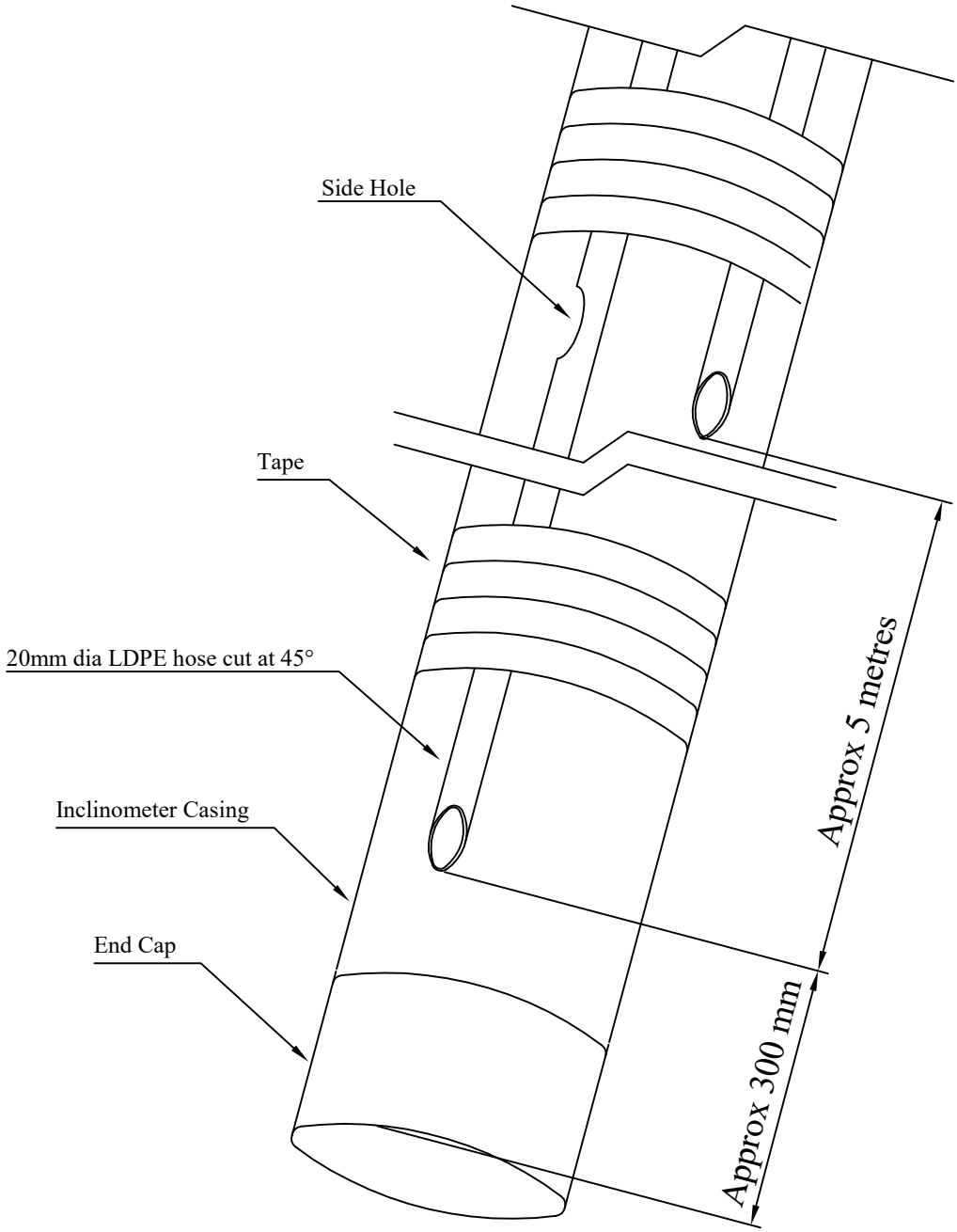

Email: geotechnical@hmagrp.com

STEP 4. : Add water to casing.

In a water-filled borehole the casing needs to have a slightly negative buoyancy. Slowly add water to the inclinometer casing until negative buoyancy is achieved and the inclinometer slowly sinks.

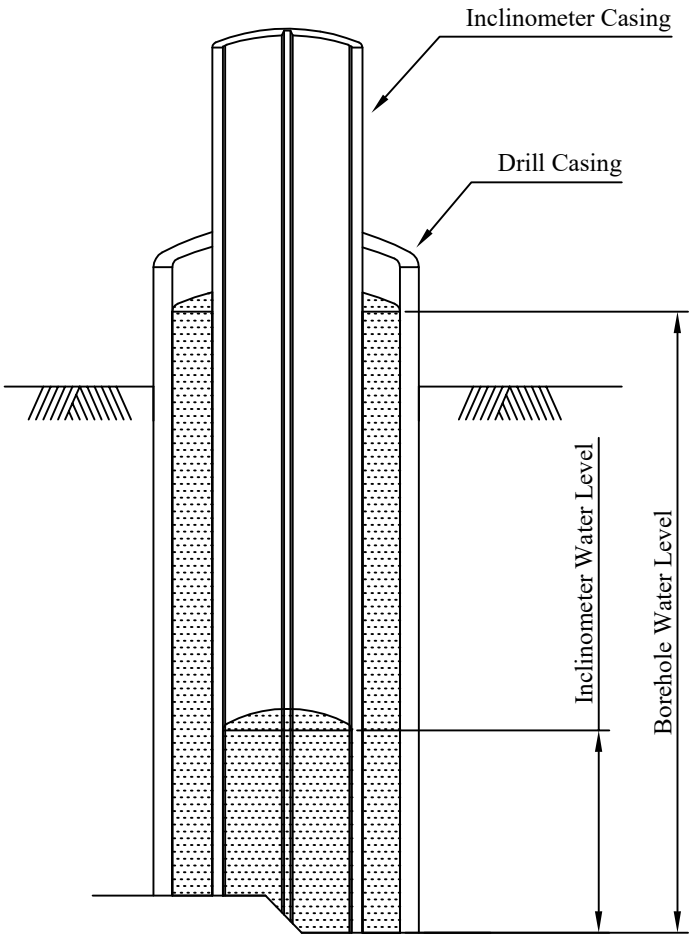

Positive Bouyancy

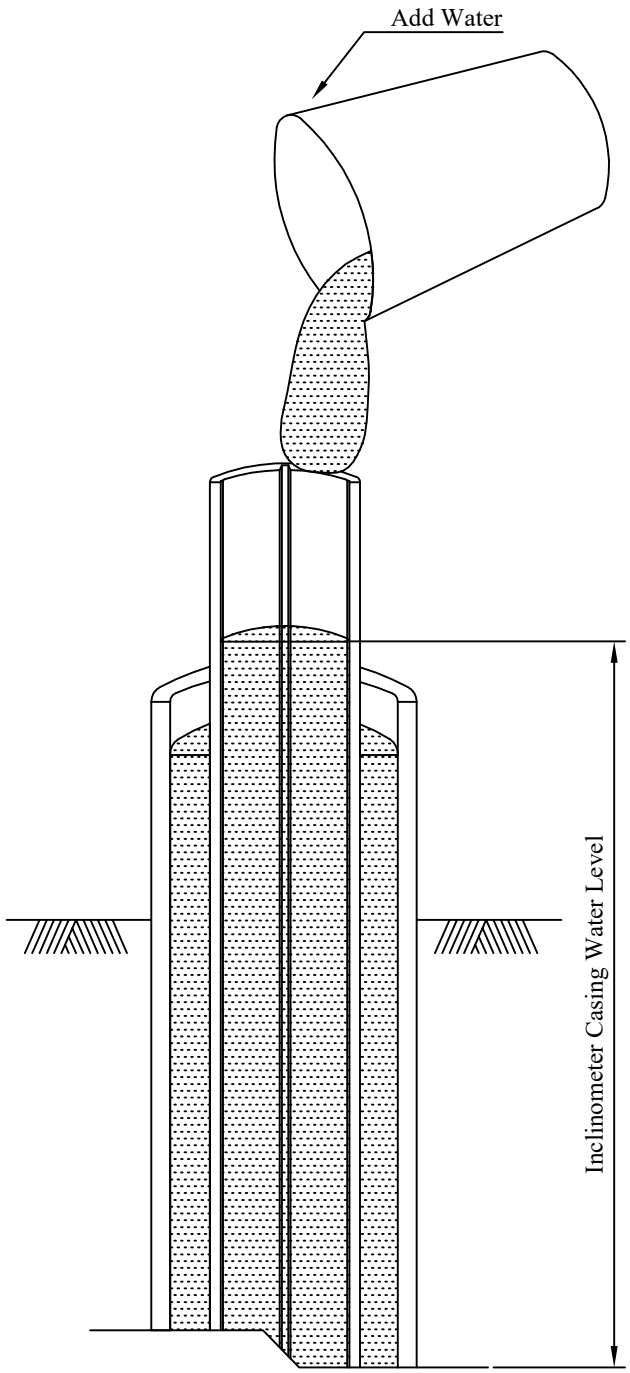

Negative Bouyancy

Email: geotechnical@hmagrp.com

STEP 5. : Lower and clamp casing.

(a) Lower casing so that the next length of casing can be easily added.

(b) Hold casing in position with a chain clamp resting on the collar of the borehole if necessary.

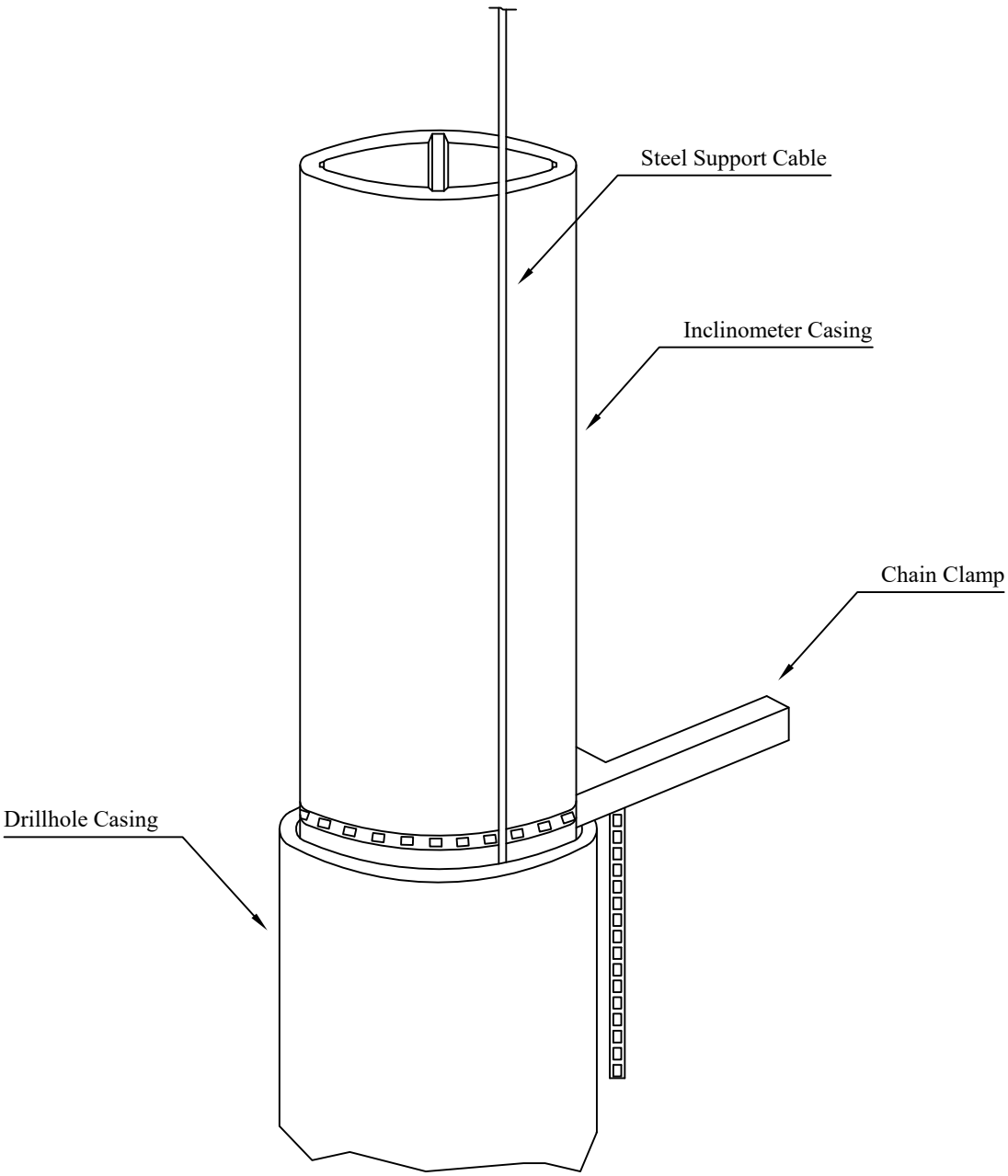

Email: geotechnical@hmagrp.com

STEP 6. : Check orientation of casing.

Having decided in which direction the expected ground movement will be, the inclinometer casing then needs to be correctly orientated. One pair of opposing internal grooves needs to be aligned in the direction of the expected ground movement. These are denoted as the A Axis, A0 faces in the direction of expected movement and A180 faces away.
The remaining grooves are denoted as the B Axis, as shown below. Rotate casing to achieve correct orientation.

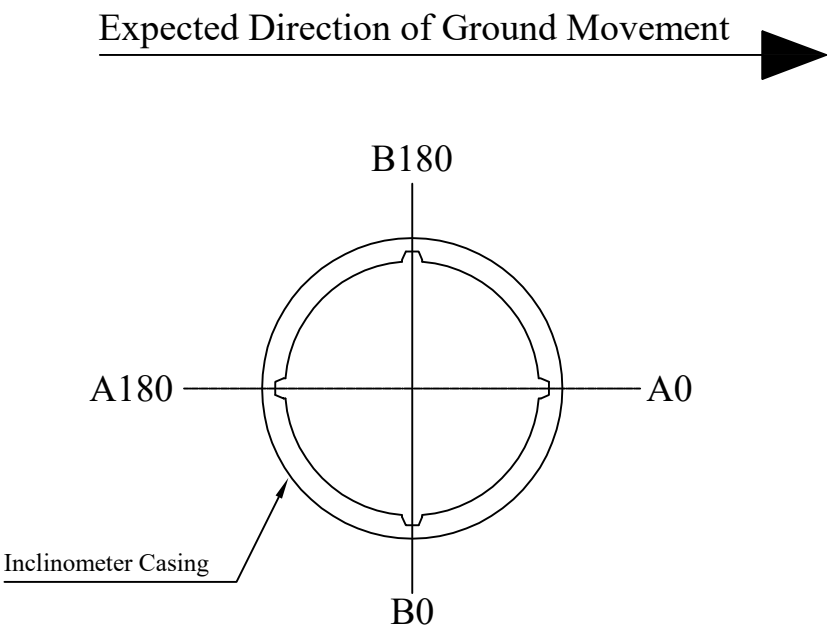

Plan View

Email: geotechnical@hmagrp.com

STEP 7. : Add extra length of casing.

The main features of GSA's inclinometer casing are illustrated below.

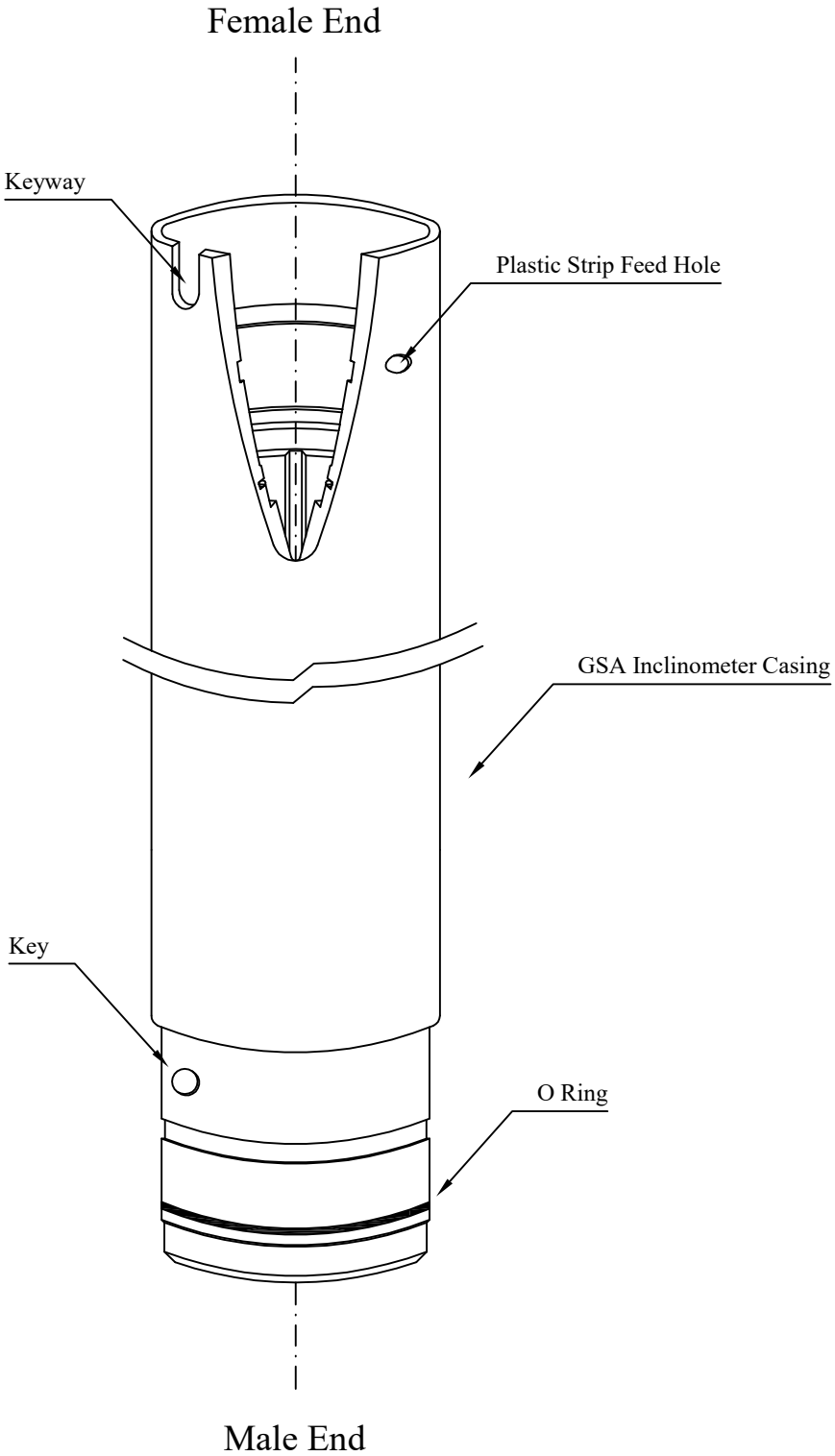

Email: geotechnical@hmagrp.com

(a) Push the male end into the female end, make sure that the keyway is correctly aligned. This assures that the internal grooves align.
Ensure that the O Ring (A) does not catch on the Keyway (B).

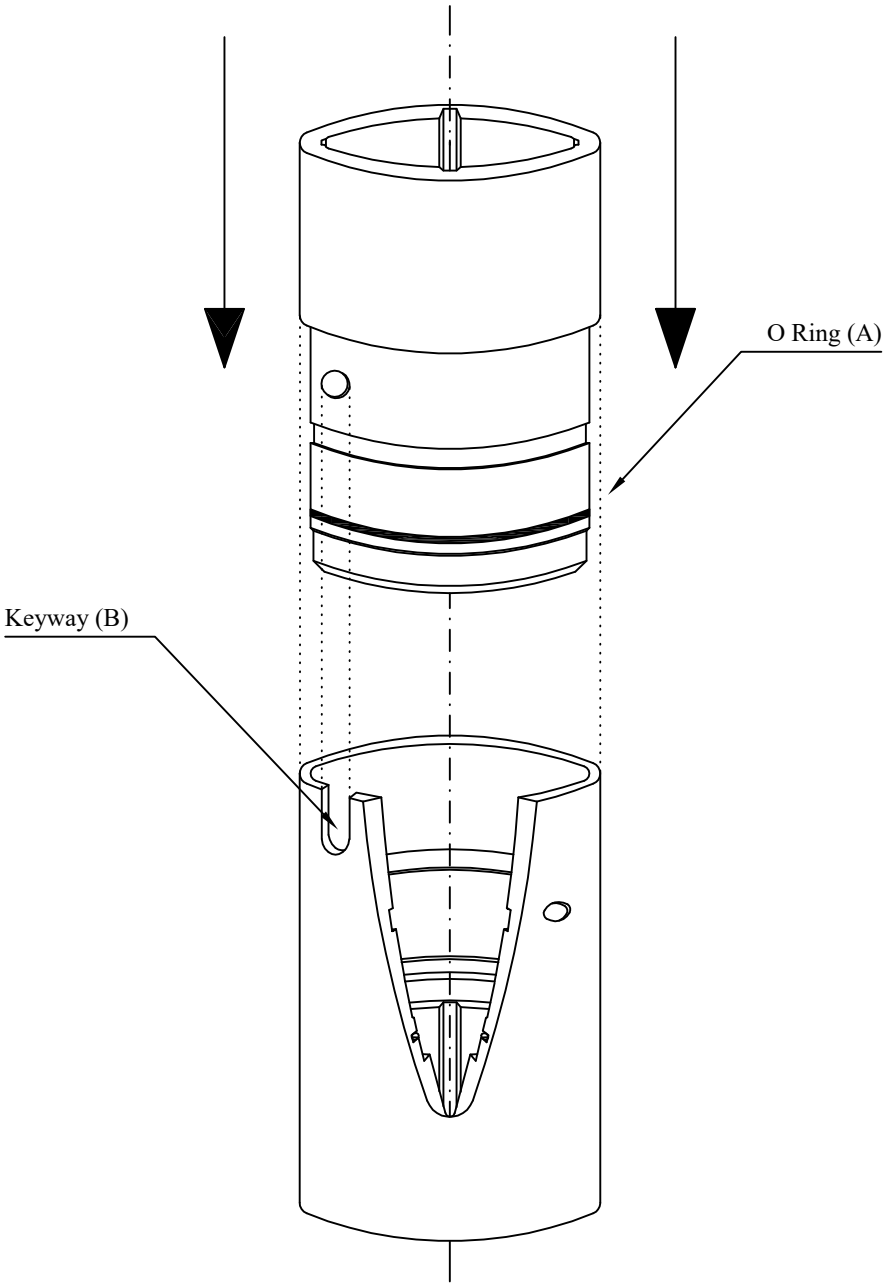

Email: geotechnical@hmagrp.com

(b) Feed the plastic strip (7040-3) clockwise through the feed hole until the end is visible through the feed hole. Ensure that the serrated side faces outward.

(c) Cut off the excess plastic strip and tape the end to the outside of the casing. Leave just enough protruding that the strip can be removed if required.

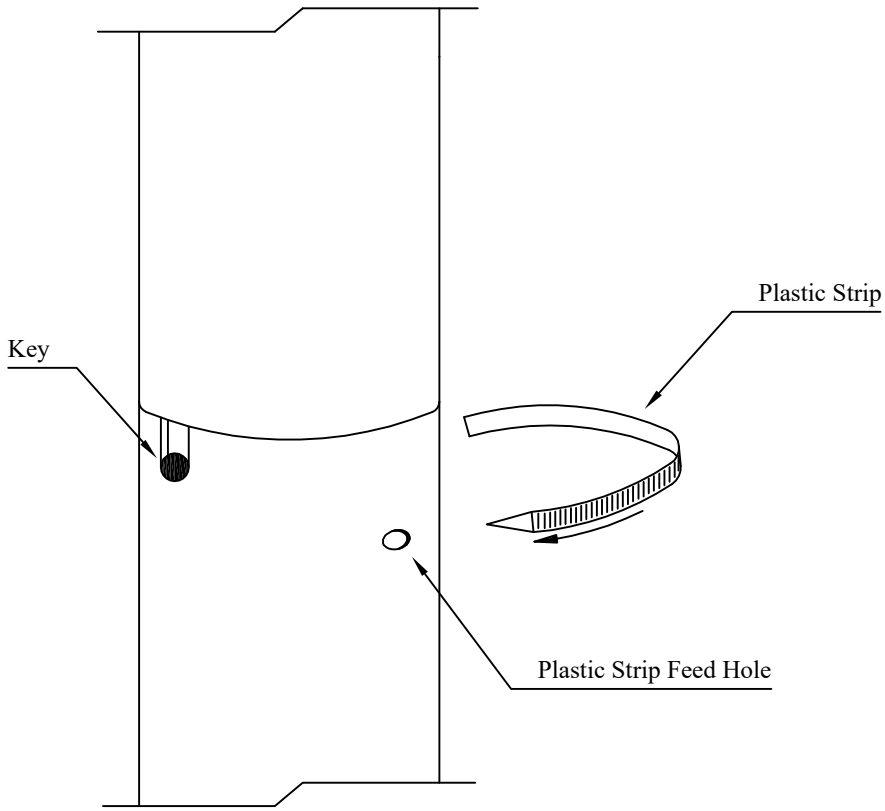

Email: geotechnical@hmagrp.com

STEP 8. : Tape grout pipes to casing.

Tape the grout pipes to the inclinometer casing at 3 metre intervals.

STEP 9. : Add additional grout pipes as required.

As discussed in STEP 3., the provision of more than the minimum two grout pipes will depend mainly on the ground conditions encountered in the borehole. Additional grout pipes should also be added to deep boreholes in competent ground to limit the grout pressure on the inclinometer casing.

(a) Use 20mm diameter LDPE tubing with the bottom end cut at 45 ^{o}and three holes cut in the side of the tubing over the last metre.

(b) Clearly mark the grout tube.

(c) Tape tube in position, ensuring that the side holes are not covered.

STEP 10. : Is the casing correctly installed?

Stop and check that the casing has been correctly installed.
Ensure that the orientation of the casing is correct , the correct depth has been acieved and that the grout pipes are not blocked.

This is the last chance to remove the inclinometer casing (See step 11) as once it is grouted it will be a permanent installation.

STEP 11. : Disassemble casing.

1) The casing is disassembled by first removing the plastic strip (7040-3).
2) Pull back the casing sections to expose the 'O'Ring, at the plastic strip feed hole.
3) Using a pair of long nose pliers, the 'O'Ring is pinched and extracted through the plastic tube feed hole.
4) 'O'Ring is then cut with a knife blade, and the 'O'Ring is then fully extracted through the plastic tube feed hole.
5) Upon completion of the 'O'Ring removal, the casings will then pull back further, completing the disassemble.
6) To allow reassembly, a NEW 'O'Ring is required. Extra 'O'Rings are located in the casing boxes.

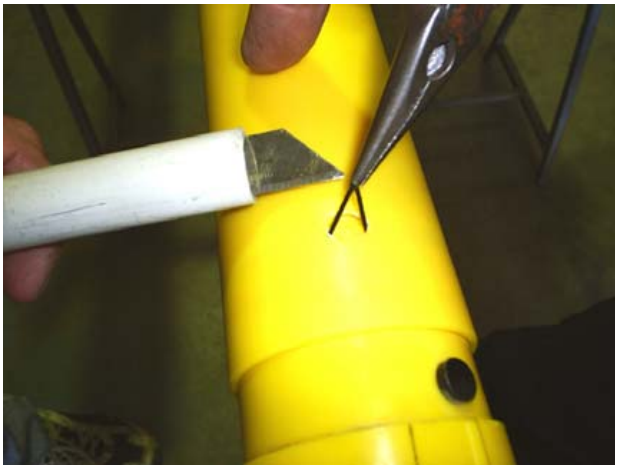

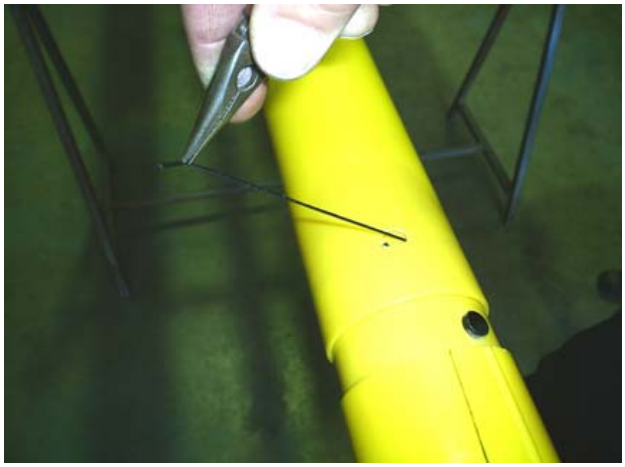

Email: geotechnical@hmagrp.com

STEP 12. : Trim casing.

When the casing is fully assembled in the borehole, cut the excess off. Allow at least 0.5m of casing to project above the adjacent ground level.

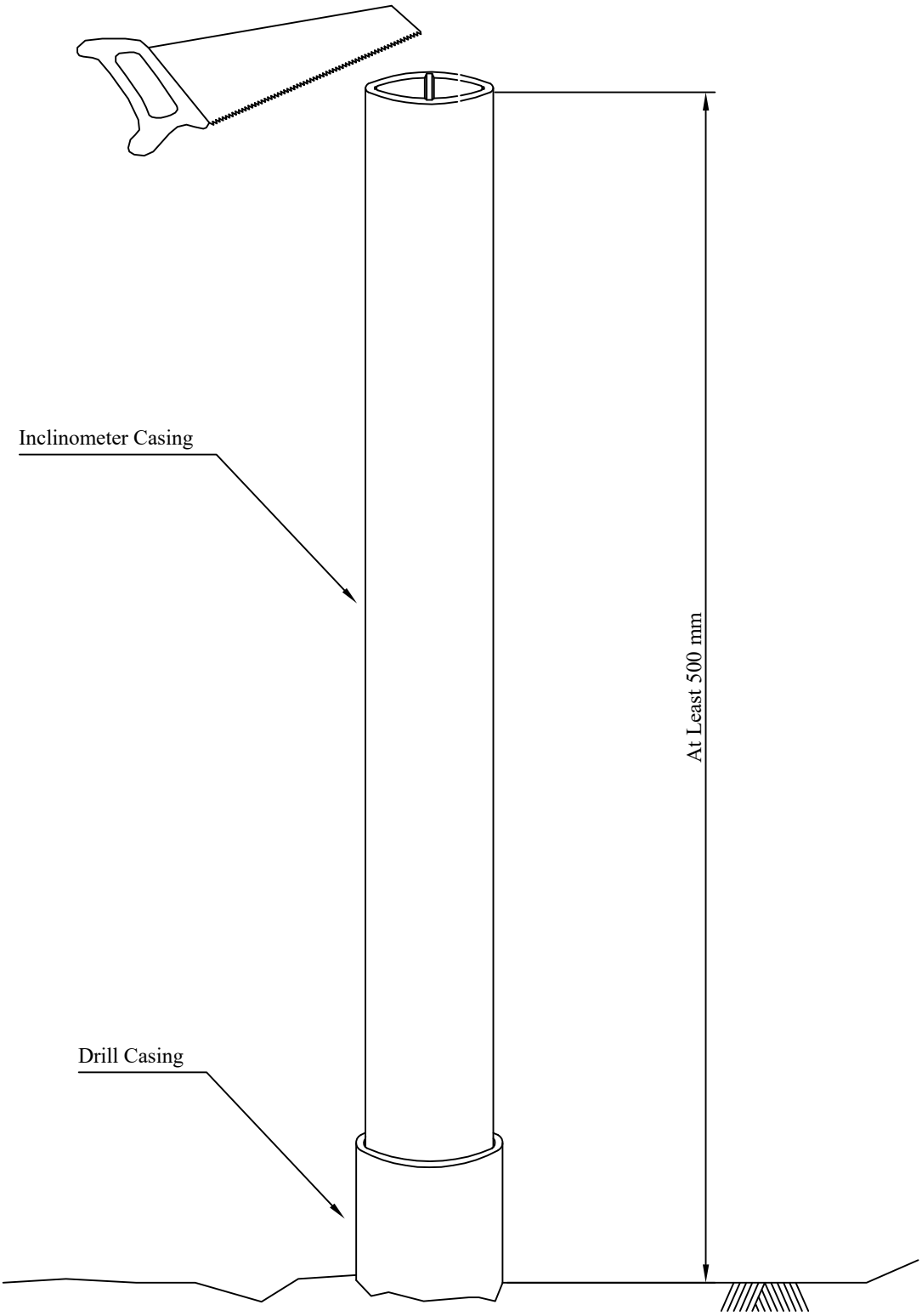

Email: geotechnical@hmagrp.com

STEP 13. : Run dummy probe.

To ensure that the casing has been assembled correctly and is clear prior to backfilling run a dummy inclinometer probe over the full length of the casing. The probe should run smoothly within both sets of grooves. Small irregularities may occur at casing joints, which are at 3 metre intervals.

STEP 14. : Cap the casing.

Place top cap (7040-2-1) on inclinometer casing to prevent ingress of backfill or debris material. The cap must not be glued on.

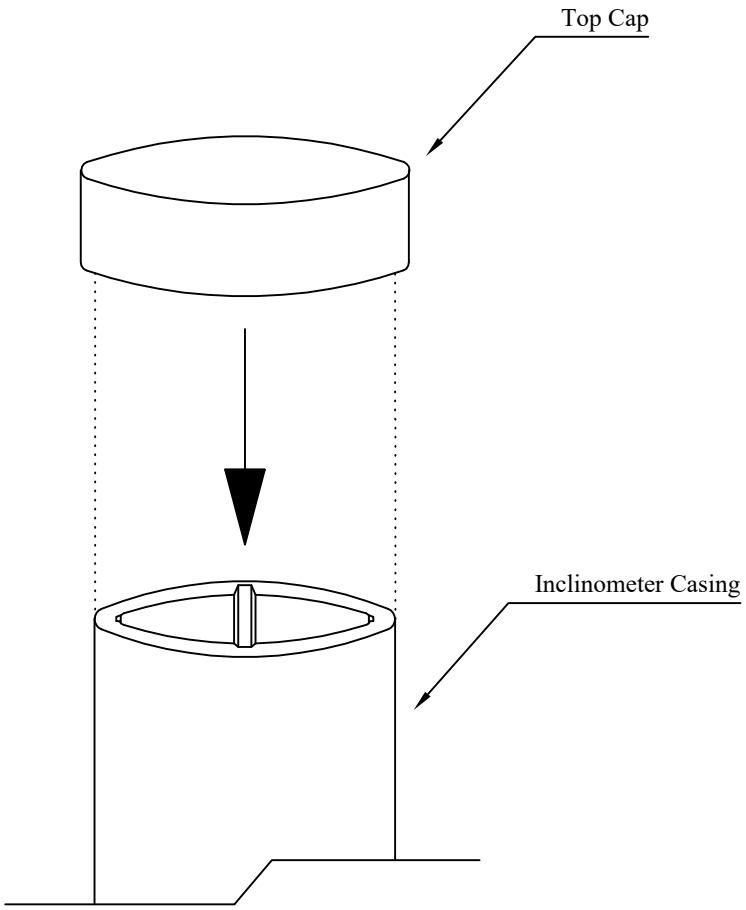

Email: geotechnical@hmagrp.com

STEP 15. : Pea gravel backfilling.

Pea gravel is a pea sized rounded aggregate that flows easily down the borehole. It is particularly suited to highly permeable ground and can be used in dry or water-filled boreholes. Substitutes such as sand or concrete aggregate should be used with caution as they can easily bridge or choke during installation.

(a) Pour pea gravel into the borehole, slowly withdrawing the drillhole casing.

(b) Occassionally shake the inclinometer casing to ensure that the pea gravel fills the annulus.

Email: geotechnical@hmagrp.com

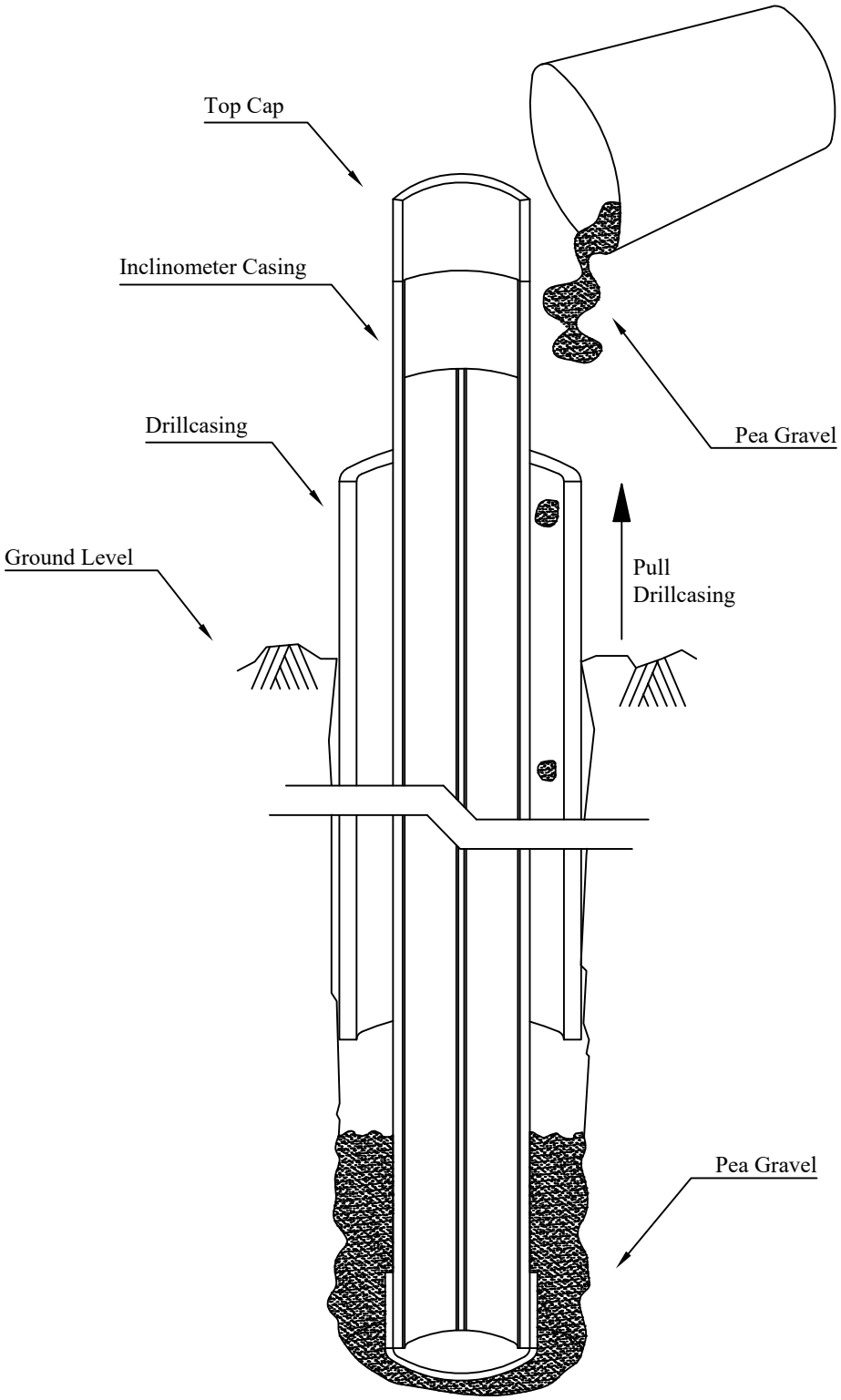

Email: geotechnical@hmagrp.com

STEP 16. : Poured grout backfilling.

Grout is the generally preferred backfill medium. However, it cannot be used in highly permeable ground. Bentonite may be added to increase the grout viscosity and weaken it's strength to match that of the ground.

Poured grout should be limited to dry shallow holes. Ideally the tremie grout method should be adopted for deep and/or water filled boreholes.

(a) Either place a drill rod in the bottom of the inclinometer casing or add 2-3 metres of water to give the casing negative bouyancy.

(b) Pour the grout slowly into the borehole annulus to an initial depth of 1 metre. Ensure that the drill casing, if present, is withdrawn clear of the grout.

(c) Pour a bucket of water down the borehole annulus to wash off any grout adhering to the drill casing.

(d) Allow grout time to set.

Email: geotechnical@hmagrp.com

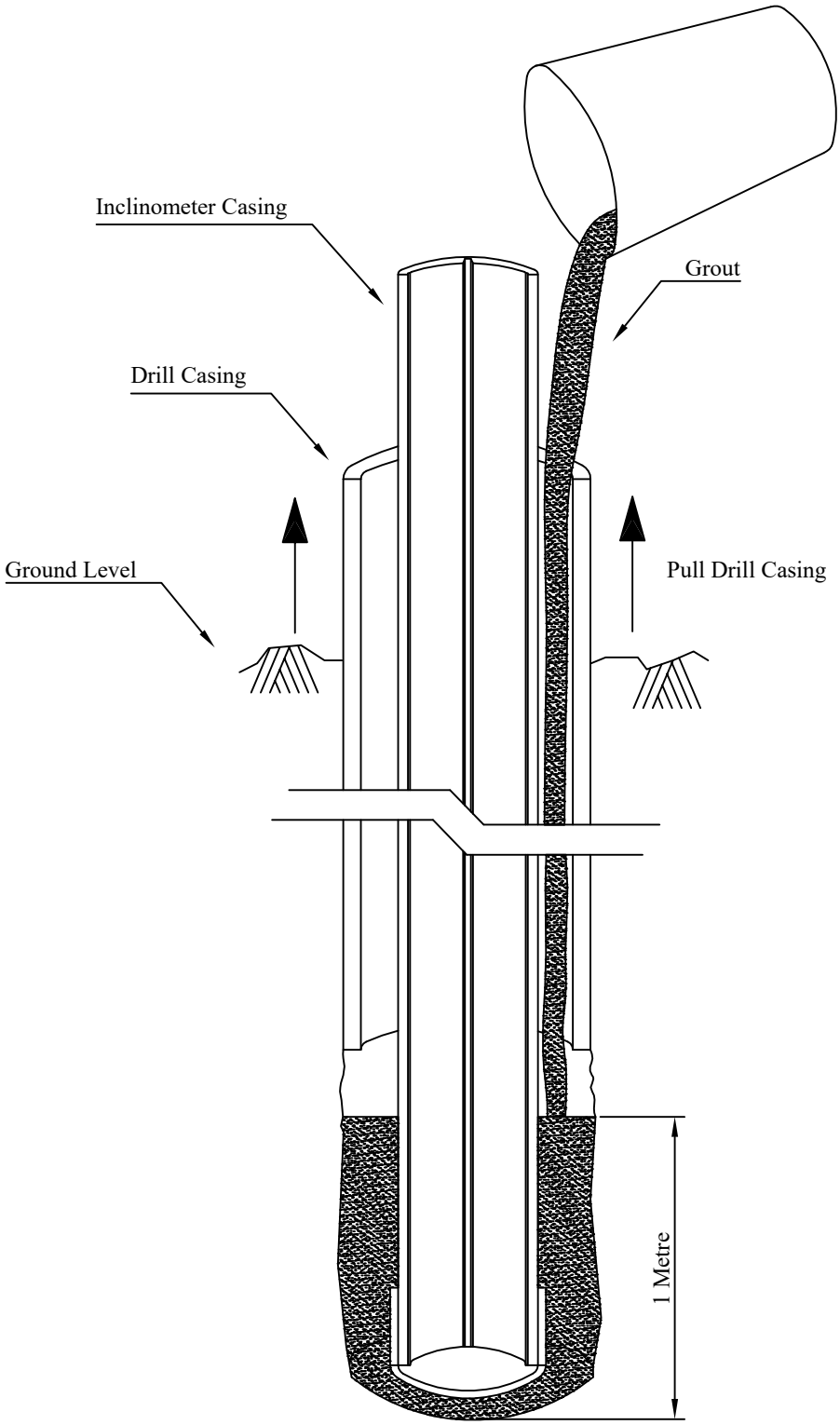

Email: geotechnical@hmagrp.com

(d) Ensure that sufficient water is in the inclinometer casing to prevent flotation of the inclinometer casing.
Water and grout levels should be maintained within 10 m of each other.

(e) Pour grout into the drillhole annulus. Ensure that the drillhole casing is always sufficiently withdrawn to be above the level of the grout. Maintain an adequate water level inside the inclinometer casing to prevent flotation.

(f) Add grout until it reaches the collar of the drillhole.

(g) Top up the following day and form a mound of grout to drain surface water away from the drillhole.

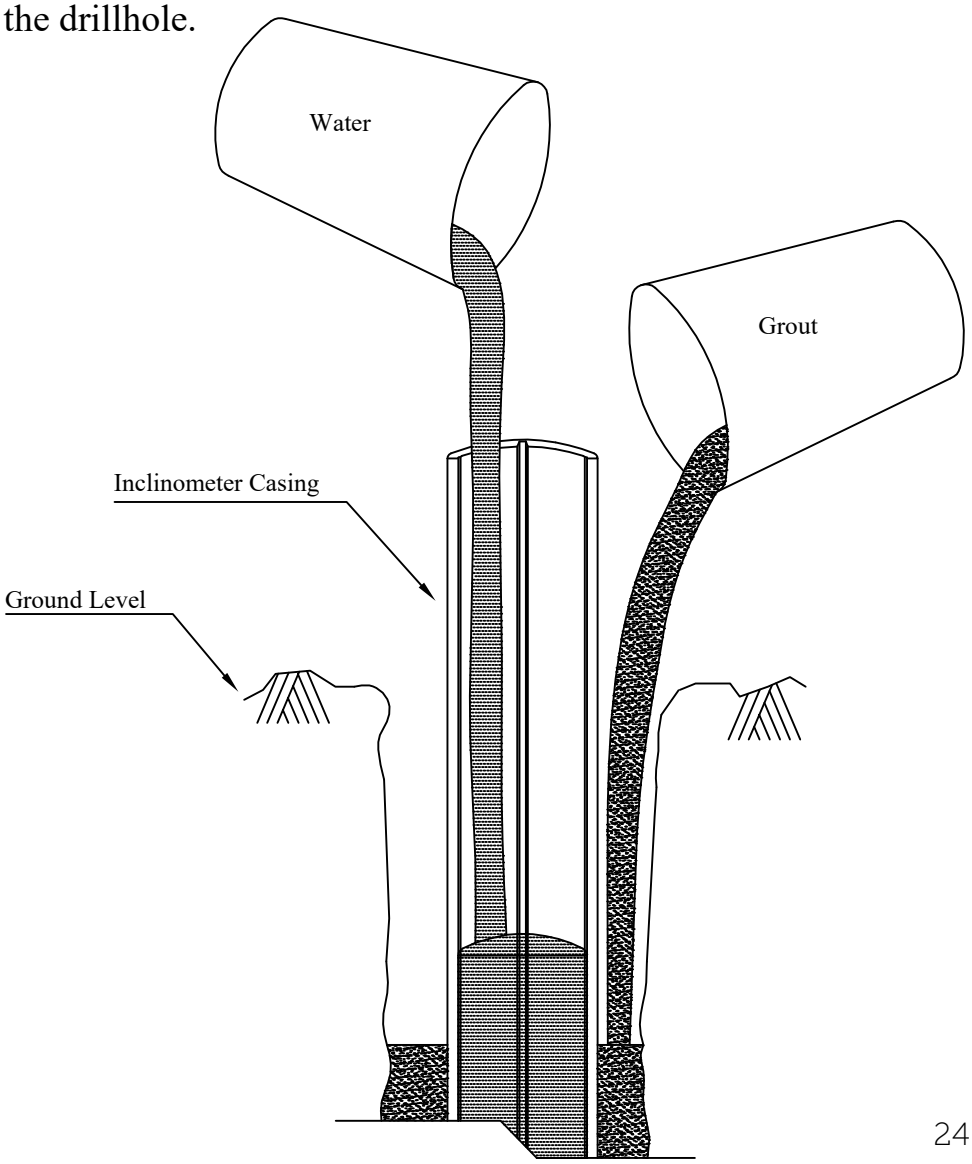

Email: geotechnical@hmagrp.com

STEP 17. : Tremie grout backfilling.

Tremie grouting is the preferred method of grouting and can be applied to both dry or water filled boreholes.

(a) Pull the drillhole casing up 4 metres from the bottom of the borehole.

(b) Grout the bottom 2 metres by pumping grout in the bottom grout tube. Measure the volume of grout to ensure that the grout will not reach the drillhole casing. The grout will displace the water in the borehole.

(c) Flush the next grout pipe with water to ensure that it is clear of grout and allow time for the grout to set.

(d) Ensure that sufficient water is in the inclinometer casing to prevent flotation of the inclinometer casing.

(e) Withdraw the drillhole casing to 2 metres above the next grout tube.

(f) Grout the next stage using a measured volume of grout and slowly add water as required to maintain the level of water inside the inclinometer casing at a level ~ 5 - 10 metres above the current grout level in the drillhole. This is important to prevent grout entering the inclinometer.

(g) Again flush the next pipe and allow time for the grout to set.

(h) Repeat STEPS 17(d) to 17(g) inclusive until all grout tubes have been used. For the final stage add grout until it reaches the collar of the drillhole. Top up the following day and form a mound of grout to drain surface water away from the drillhole.

Note : In soft soils the usual grout mix may be too stiff and a higher percentage of bentonite may be added to the grout mix.

STEP 18. : Protect and cap casing.

(a) Provide suitable protection for the protruding inclinometer casing, such as a large tyre. A lockable cover (8070-1) may also be used. Ensure that the inclinometer survey equipment will fit onto the casing with the lockable cover frame in position.

(b) Clearly mark the A0 axis direction for future users.

(c) Install top cap, do not glue the top cap onto the casing.

STEP 19. : Take base readings.

(a) Wait until the grout has cured.

(b) If required, pump water from the inclinometer casing.
This is not necessary with the GSA or Sinco probes.

(c) Run the dummy probe over the full length of the casing to check that there are no obstructions.

(d) Take two complete surveys on all four faces.
These will be the base readings that all subsequent data are compared against.

INSTALLATION RECORD	
Borehole No.	Job No.
Client	
DRILLING DETAILS	
Start Date	End Date
Borehole Depth	Contractor
Casing Diameter	Borehole Diameter
DESIGN DETAILS	
Ground Elevation	Brg of A Axis (Intended)
Inclinometer Depth (Intended)	
No. of 3m Lengths Required	No. of 3m Lengths On Site
Backfill / Grout Mix Required	
Quantity (m^3)	Quantity (litres/m of borehole)
AS BUILT DETAILS	
No. of Lengths Used	No. of Lengths Remaining
Installed Depth	Actual Brg of A Axis
Backfill / Grout Mix Used	
Quantity (m^3)	
TESTING	
Probe Tracked Both Pairs of Grooves Prior to Grouting (Y/N)	
Grout In Hole (Y/N)	
Probe Tracked Both Pairs of Grooves After Grouting (Y/N)	
Base Readings Taken (Y/N)	
Comments	
Installed by	Date

Email: geotechnical@hmagrp.com

HMA GEOTECHNICAL

Email: geotechnical@hmagrp.com

Tel: +61 (0)3 8720 6700

Fax: +61 (0)3 8720 6799

HMA GROUP

MATERIALS HANDLING | WEAR SOLUTIONS | FLOW & INDUSTRIAL

INSTRUMENTATION | POWER GENERATION | GEOTECHNICAL

GEO-ML-0001. OCT 2018

AUSTRALIA - NEW ZEALAND - INDONESIA - SOUTH AFRICA

www.hmagrp.com