X96S Series Density System

HMA INSTRUMENTATION

For more than 27 years Ronan has provided the process control industry with unsurpassed products in the harshest environments. With a philosophy of designing new products to be backward compatible, our customers have the confidence of an installed base of thousands of systems. A worldwide network of dealers, 24-hr factory certified Field Service Engineers and an experienced staff of Applications Engineers are ready to assist with your measurement needs.

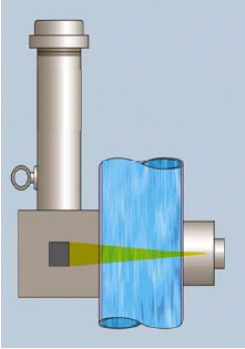

APPLICATIONS

- Ideal for Liquid Processes where Traditional Contact Technologies Cannot be Used
- Measurement Not Affected By:
- Internal Obstructions
- Extreme Process Temperatures
- Caustic Products
- Slurries
- Violent Product Flow
- Sterile Process
- Changing Process
- Mounts External to Existing Pipes with No By-Pass Lines
- Display in Customer-Specified Units
- Most Applications can be Solved with Low Energy Sources
- Push Button to Calibrate
- Empty Pipe Monitor
- Mass Flow Capability

FEATURES AND BENEFITS

- LSingle Computer, Compatible with all Ronan Detectors. Easily Expandable to Accurately Measure the Most Complex Processes.
- Excellent Measurement Reliability due to Proprietary Filtering Technology
- Lowest Level Sources on the Market
- Automatic Decay Compensation
- Low Maintenance / No Component Wear
- Auto-Calibration

The X96S Density System is designed to deliver outstanding performance in a wide range of difficult applications and process conditions. The system utilizes a single computer compatible with all Ronan detectors, which is easily expandable to accurately measure the most complex processes. These include the most dangerous materials such as caustic, toxic, corrosive, explosive, and carcinogenic irrespective of their solids content, viscosity and temperature. The modular design is ideal to upgrade older systems while keeping the existing sources.

MEASUREMENT PRINCIPLE

Each system consists of a gamma source, detector and microprocessor. The gamma source, mounted external to the pipe emits energy through the walls and the process in a direction towards the detector mounted on the opposite side to the source. The detector measures the level of energy reaching it and sends a proportional signal to the microprocessor. The X96 microprocessor filters and correlates this signal to a density/percent solids measurement, the user can select from a list of units of measure for the desired reading.

The entire system is mounted external to the pipe via clamps and can be easily installed and maintained while the process is running...without expensive down time, pipe modifications or chance of accidental release. The system can also be installed on a variety of pipe materials.

- FRP Pipe
- PVC Pipe
- Carbon Steel
- Stainless Steel
- Glass Lined Pipe
- Rubber Lined Pipe

Z-Axial sections or spool pieces are available for small measurement ranges and small diameter pipes where increased accuracy and repeatability is desired.

Email: instrumentation@hmagrp.com

X96S Series Density System

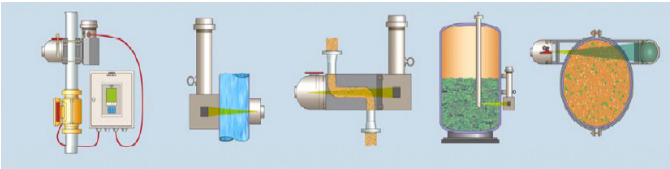

SOURCE HOLDERS

Ronan pioneered the development of ultra-low level sources to greatly improve safety, and eliminate the requirement for surveys, wipe tests, inspections and much of the documentation. They are so safe the NRC permits their removal and installation without a licensed person being present, translating into significant cost savings for the user.

The RLL-1 ultra low source utilizes very small quantities of radioactive materials. RLL is a Ronan Engineering term that stands for "Radiation Low Level." RLL technology utilizes up to a total of 0.9 mCi (0.033 GBq) of cesium source. In comparison, some conventional density gamma gauges use source sizes with a hunderd times more activity to make the same measurement. Because of these very low-levels of activity, and their simplicity of design, Ronan systems are the safest gamma gauges on the market. The NRC recognized this in 1999 when Ronan Engineering attained certification for the first RLL source design.

Ronan understands that installation costs of instrumentation is a major factor when choosing a technology or vendor. To minimize the need to make changes to your existing installation, Ronan offers a wide variety of source holder designs including small physical sizes where space is limited.

Whatever the installation requirements, Ronan can work with you to install the safest source and source holder for the application.

RLL-1 Low level Source Holder

SA-1 Source Holder

X96S MICROPROCESSOR

The X96S Process Measurement Computers are the most advanced, featuring the fastest processors in the radiametric density gauge industry. The modular design allows for lowcost expansion of outputs and measurement variables. Calibration and configuration is in a simplified format and can be achieved locally through push buttons on an liquid crystal graphic display, or remotely through industry standard protocols. The X96S is compatible with all models of Ronan detectors and can accommodate multiple detector inputs for longer measurements.

FEATURES

For Use in the Following Measurements:

- Density
- Mass Flow
- Level
- Level with Density Compensation
- Mold Level
- Weight

System Integration via:

- HART
- Foundation Fieldbus
- PROFIBUS PA
- Local Display Shown in HART Format
- Optional Local and/or Remote Eight Line Display
- Flexible, Modular Design Permits Customization
- Multiple Detector Capability
- State of the Art Dynamic Filtering
- Isolated Digital and Analog I/O, Software Settable
- NEMA-4, 4X, Enclosure or Rack Mount Chassis
- Power: 90 -240 VAC. or 24 VDC
- Compatible with all Ronan Detector Offerings

Outputs:

- HART 4-20mA,
- Foundation Fieldbus
- PROFIBUS PA
- Up to 4 Form "C" Relay Outputs
- Up to 4 Isolated Open Collector Outputs Capable of Switching 4.5 to 30 volts
- Up to 8 Digital Inputs which can be Configured (Individually) as Dry or Live Contacts, Quadrature, Encoders or Pulse Counters

X96S Series Density System

HMA INSTRUMENTATION

- Pressure Input: Support for Process Pressure from 0-10 volts, or 4-20 mA
- Temperature Input: Nickel or Platinum RTD
- Diagnostics: On-Board Modular Self-Test Watchdog Timer and Status LEDs.
- Calibration: Available Through LOI, PC Based Software or Communicator / DCS
- RS-232/RS-485 Optional
- Ronan Quality Manufacturing - Backed by a Three Year Limited Warranty

RONAN SCINTILLATION DETECTOR

Ronan pioneered the use of solid crystal scintillation detectors more than 20 years ago, and now has an installed base in the thousands across a wide variety of applications worldwide. Ronan employs two types of crystals. Scintillating Plastic Crystals for standard applications and Sodium Iodide scintillating crystals for ultra low-level fields.

- Power Requirements: 24 VDC @ .035 A,
- Ratings: UL, Cenelec/Atex Class 1, Div 1 Nema 4, Nema 4X
- Operating Temperature: -10 to +60 C
- Heater Blankets Available for Low Temperatures and Small Measurement Ranges

RONAN ION CHAMBER DETECTOR

First introduced in the 1970s, the ion chamber detector has been in constant use due to the reliability and robustness of the design. It can withstand intense vibration, while delivering accurate and repeatable measurements even on narrow density ranges.

FEATURES

- Rugged Design
- Spring Tension of PM Tube. Maintains Integrity of the Signal Path Under Vibration
- Ronan Quality Manufacturing-Backed by a Five Year Limited Warranty

FEATURES

- High Detector Efficiency
- Spring Tension of PM Tube. Maintains Integrity of the Signal Path Under Vibration
- Lowest Gamma Fields in Industry
- Ronan Quality Manufacturing-Backed by a Three Year Limited Warrant

SPECIFICATIONS

- Construction: Electronics - Stainless Steel Housing - Schedule 40 Carbon Steel, Epoxy Painted - 304 Stainless Steel or PVC Optional
- Scintillation Crystal: Plastic or Sodium Iodide
- System Accuracy: +/- 1 % span (typical)

SPECIFICATIONS

- Construction: Electronics – 4" Diameter, 6" Length in Stainless Steel Housing Housing - Schedule 40 Carbon Steel, Epoxy Painted - 304 Stainless Steel or PVC Optional
- System Accuracy: +/- 1 % span (typical)
- Power Requirements: 24 VDC @ .035 A,
- Ratings: UL, Cenelec/Atex Class 1, Div 1 Nema 4, Nema 4X
- Operating Temperature: -40 to +60 C
- Heater Blankets Available for Low Temperatures and small Measurement Ranges

Email: instrumentation@hmagrp.com

X96S Series Density System

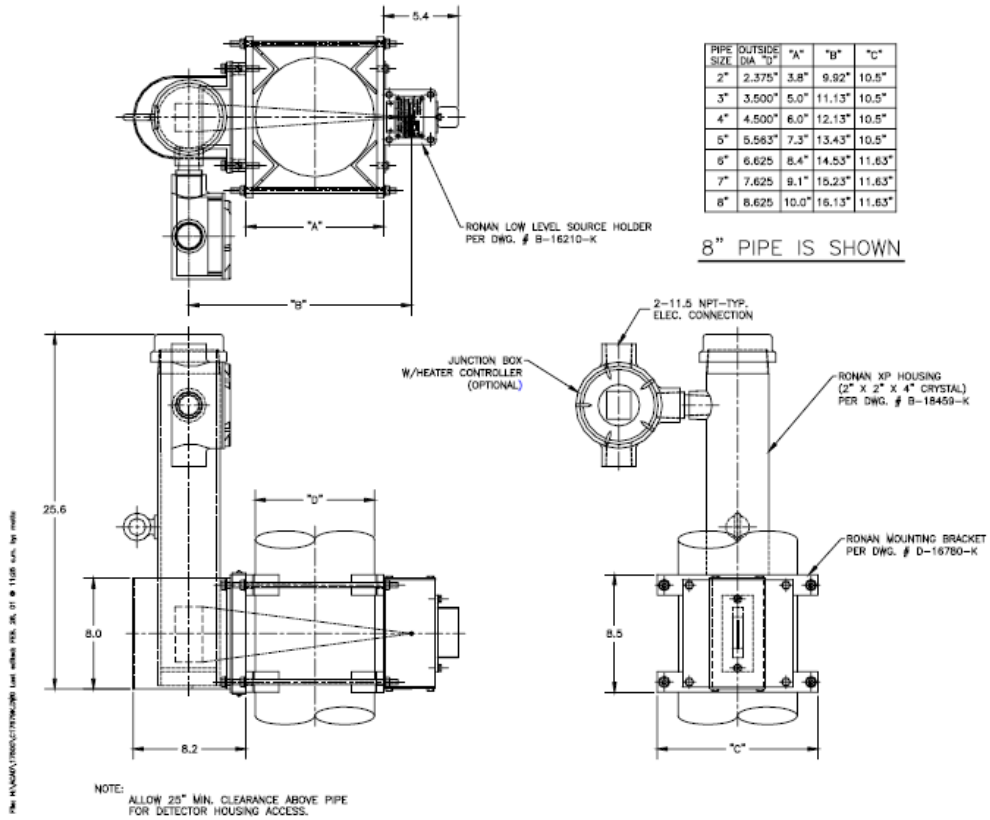

PIPE SIZE	OUTSIDE DIA "D"	"A"	"B"	"C"
2"	2.375"	3.8"	9.92"	10.5"
3"	3.500"	5.0"	11.13"	10.5"
4"	4.500"	6.0"	12.13"	10.5"
5"	5.563"	7.3"	13.43"	10.5"
6"	6.625	8.4"	14.53"	11.63"
7"	7.625	9.1"	15.23"	11.63"
8"	8.625	10.0"	16.13"	11.63"

8" PIPE IS SHOWN

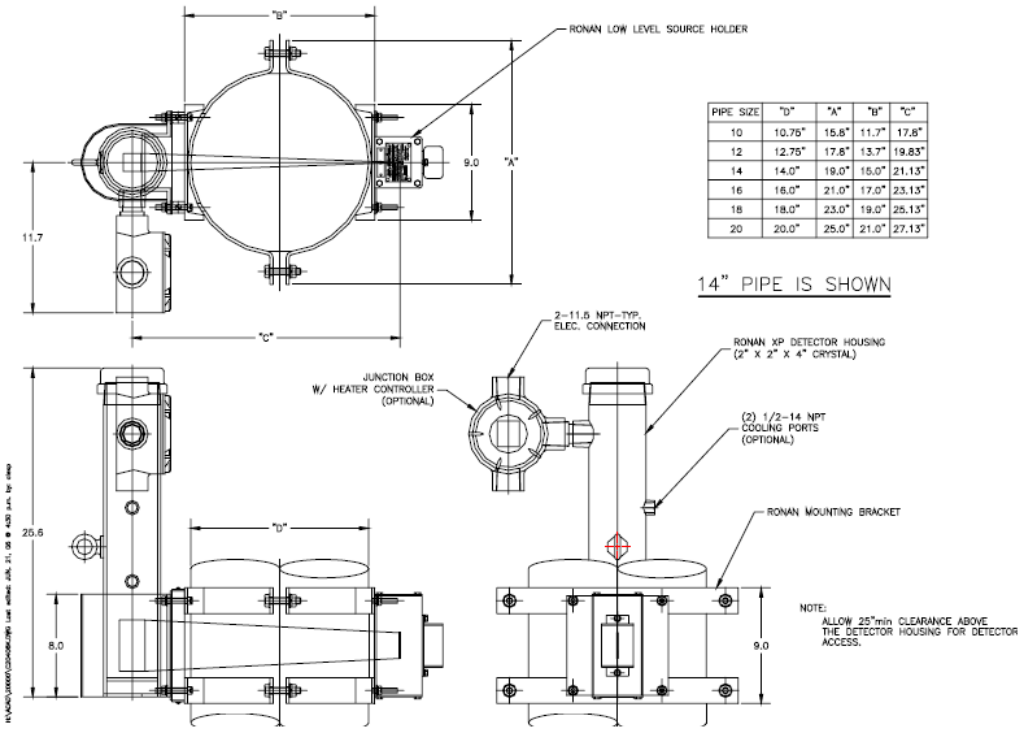

PIPE SIZE	"D"	"A"	"B"	"C"
10	10.75"	15.8"	11.7"	17.8"
12	12.75"	17.8"	13.7"	19.83"
14	14.0"	19.0"	15.0"	21.13"
16	16.0"	21.0"	17.0"	23.13"
18	18.0"	23.0"	19.0"	25.13"
20	20.0"	25.0"	21.0"	27.13"

14" PIPE IS SHOWN

www.hmagrp.com

Email: instrumentation@hmagrp.com